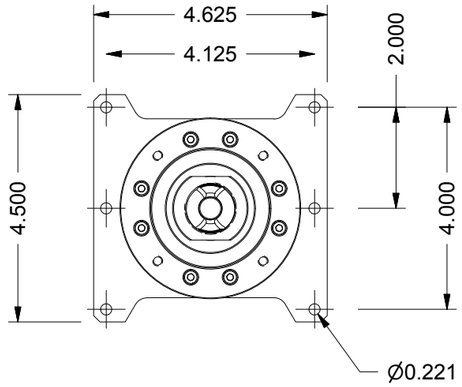
4.625
4.125
2.000
4.500
4.000
Ø0.221

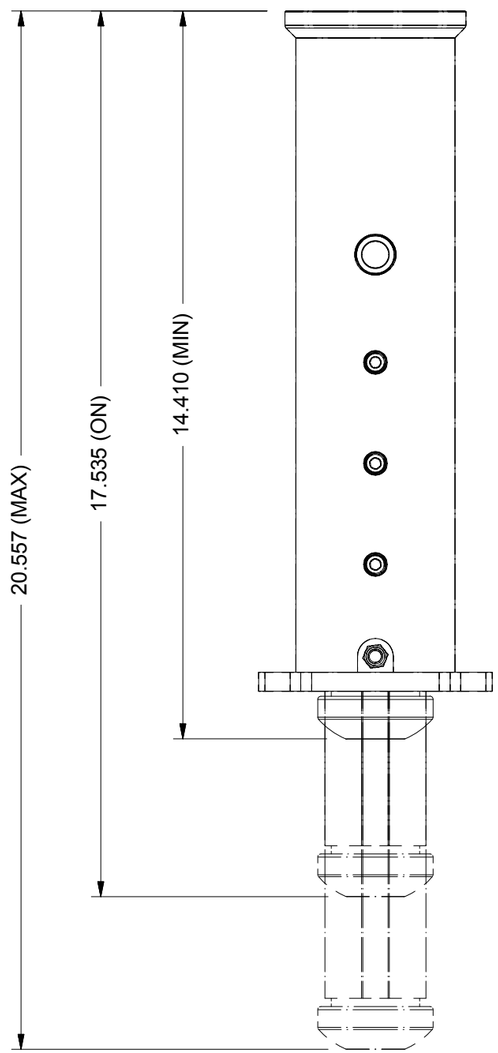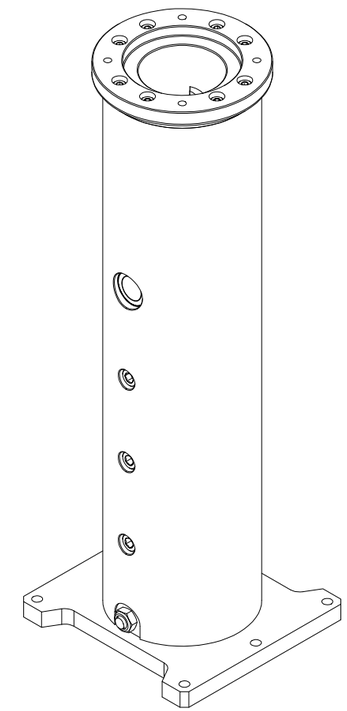
20.557 (MAX)
17.535 (ON)
14.410 (MIN)