BIAR Sampling Systems

SECURITY | EFFICIENCY | SIMPLICITY

TECHNICAL DOCUMENTATION

BIAR, Inc.
2506 S. Philippe Ave.
Gonzales, LA 70737

Tel.: 225-647-4300
Fax: 225-647-4309
sales@biar.com

SWISS MADE SINCE 1983

OPEN

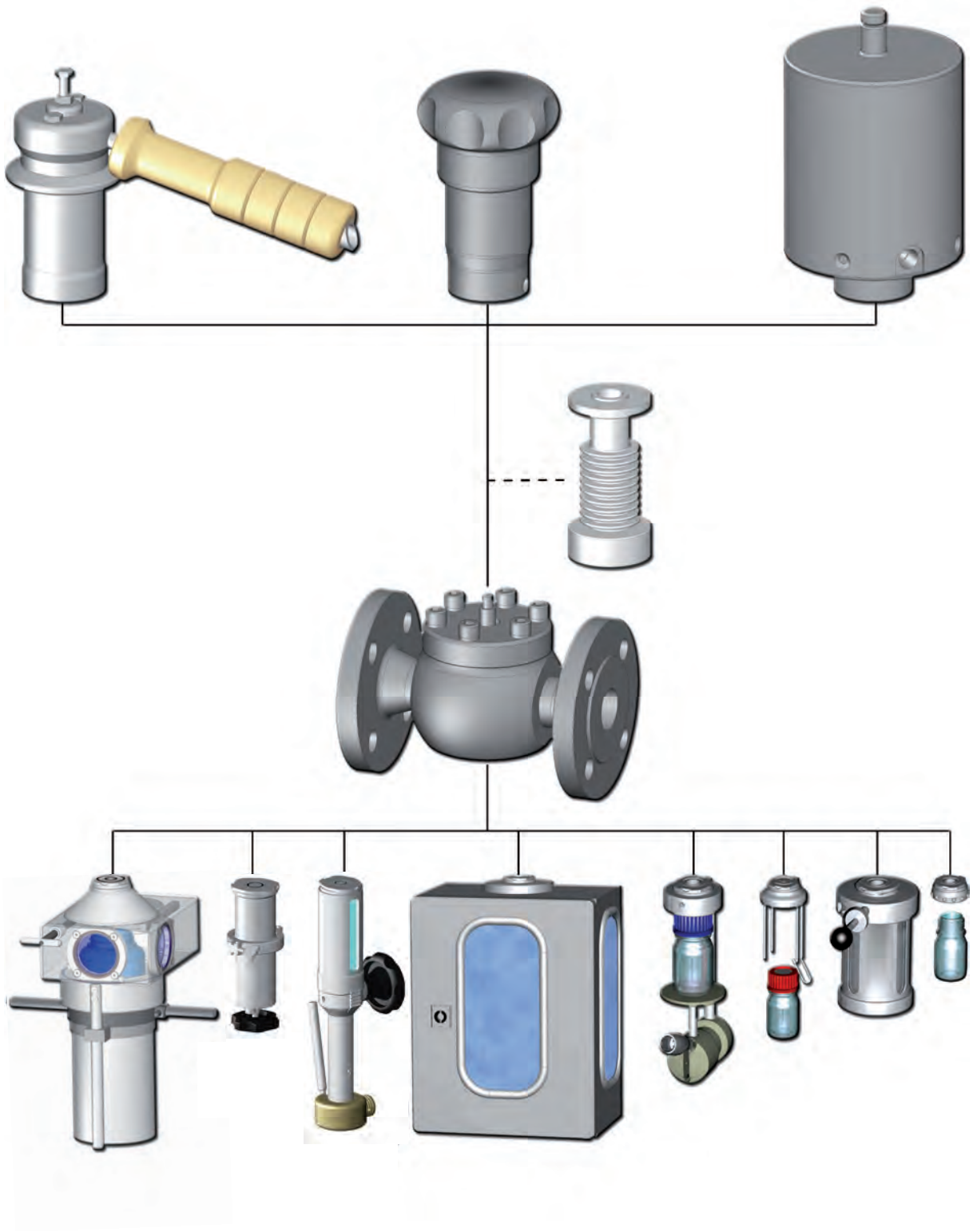

TABLE OF CONTENTS

IN-LINE SAMPLING SYSTEMS FOR LIQUID	Stainless steel valves	1
	PFA lined valves	2
	Variants (Materials, Actuators,...)	3
	Accessories	4
	Options	5
SYSTEMS FOR GAS AND LIQUEFIED GAS		6
REACTOR SAMPLING SYSTEMS		7
OTHER PRODUCTS (QUANTITATIVE,...)		8
APPENDIX		9

STAINLESS STEEL VALVES

SS SAMPLING VALVE
WITH FLANGES
HORIZONTAL LINE
(VERTICAL LINE [2])
MULTIPLE FUNCTION

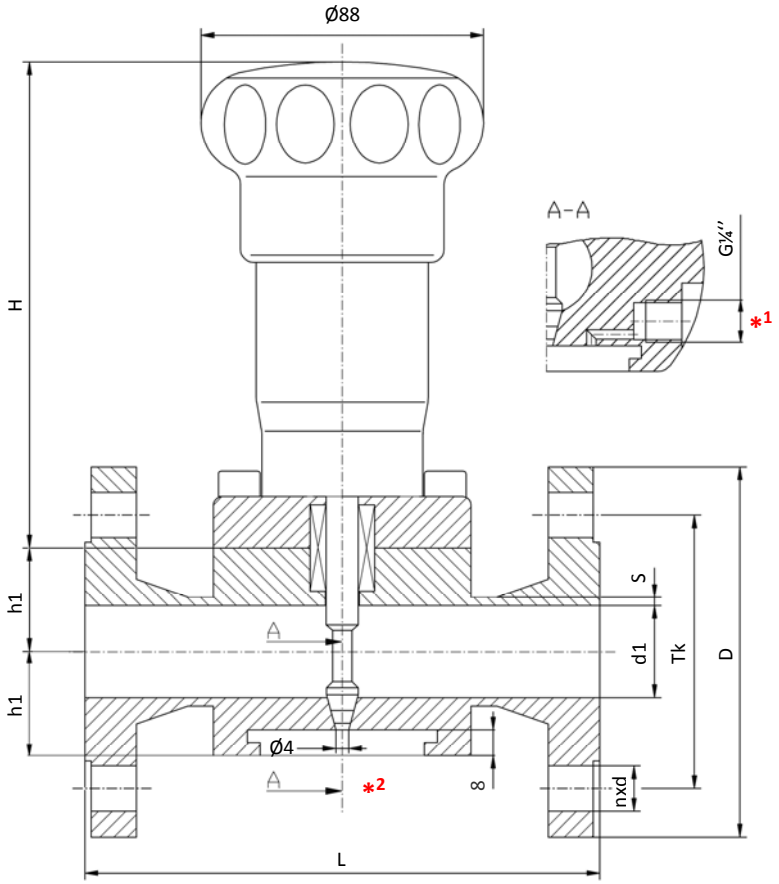

Material [3]
316L / 1.4435 / 1.4404 / PTFE

Dimensions in mm

ANSI	L	H	h1	s	d1	D		Tk		nxd		kg
	150#/300#					150#	300#	150#	300#	150#	300#	
½	160	152	27	2	17.3	89	95	60.5	66.6	4x15.7		
¾			29	2.3	22.3	98	117	69.9	82.6	4x15.7	4x19.1	
1			32	2.6	28.5	108	124	79.2	88.9			7.3
1¼			37		37.2	117	133	88.9	98.6			
1½	165		40		43.1	127	156	98.6	114.3		4x22.4	
2	178		45		54.5	152	165	120.7	127	4x19.1	8x19.1	
2½	190		53	2.9	70.3	178	190	139.7	149.4		8x22.4	
3	203		59	3.2	82.5	190	210	152.4	168.1			
4	229		72	3.6	107	229	254	190.5	200.2	8x19.1		
6	267		98	4.5	155	279	318	241.3	269.7	8x22.4	12x22.4	

	TS (°F/°C)	-20/-29	0/-18	200/94	300/149	400/205
PS	150# (psi/bar)	232 / 16	232 / 16	195 / 14	175 / 12	160 / 11
	300# (psi/bar)	232 / 16	232 / 16	232 / 16	232 / 16	232 / 16

[1] *vent hole connection p.5.010*
[2] *for ex. with elbow adapter p.4.020*
[3] *other material on p.3.010*

SS SAMPLING VALVE
WITH FLANGES
VERTICAL LINE
MULTIPLE FUNCTION

Material [2]
316L / 1.4435 / 1.4404 /PTFE

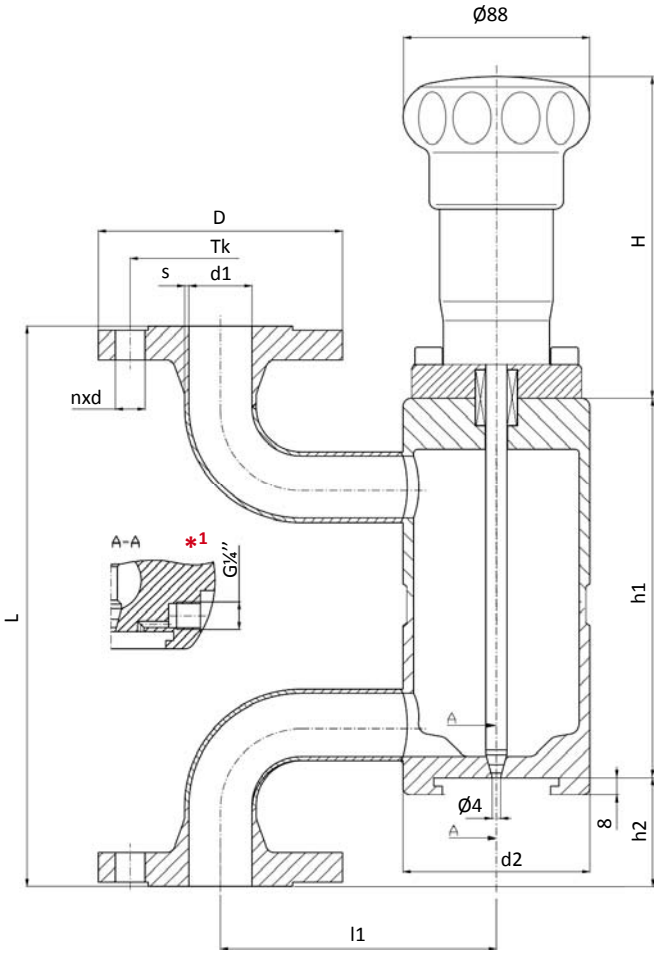

Dimensions in mm

ANSI	L	H	l1	h1	h2	s	d1	d2	D		Tk		nxd		kg
	150#/300#								150#	300#	150#	300#	150#	300#	
1	296	152	130	179	52	2	29.7	87	108	124	79.2	88.9	4x15.7	4x19.1	
1½	332		170		67		44.3		127	156	98.6	114.3		4x22.4	
2	365		170		67	2.6	55.1		152	165	120.7	127	4x19.1	8x19.1	
3	478		200	241	113		83.7	113	190	210	152.4	168.1		8x22.4	
4	599		250	298	135		109.1	141.3	229	254	190.5	200.2	8x19.1		

	TS (°F/°C)	-20/-29	0/-18	200/94	300/149	400/205
PS	**150#** (psi/bar)	232 / 16	232 / 16	195 / 14	175 / 12	160 / 11
	300# (psi/bar)	232 / 16	232 / 16	232 / 16	232 / 16	232 / 16

[1] *vent hole connection p. 5.010*
[2] *other material on request p.3.010*

SS SAMPLING VALVE
WITH FLANGES
LATERAL ASSEMBLY
MULTIPLE FUNCTION

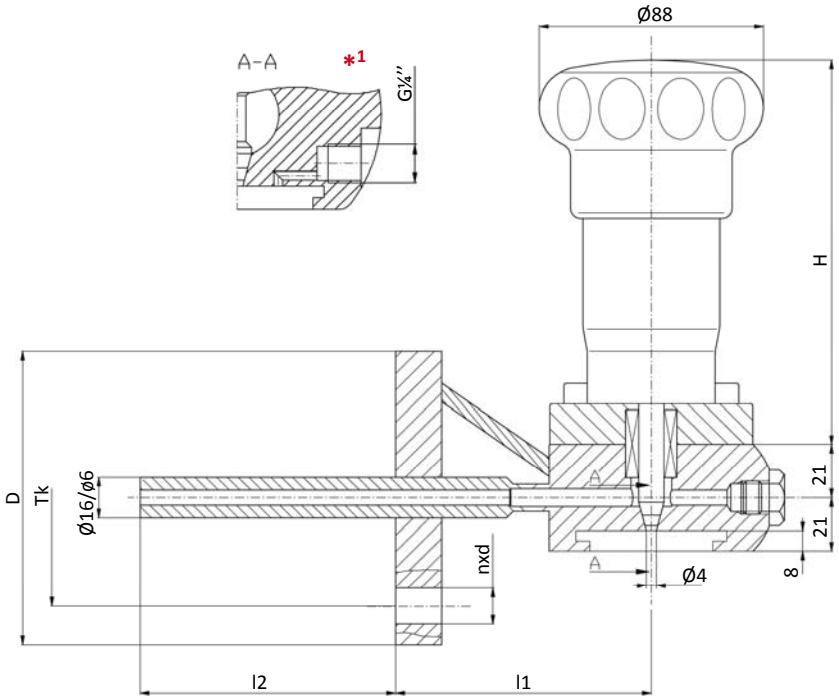

Material [2]
316L / 1.4435 / 1.4404 /PTFE

All other dimensions on request

Dimensions in mm

ANSI	l1	l2	H	D		Tk		nxd		kg
	150#/300#			150#	300#	150#	300#	150#	300#	
½	100 (Other value on demand)	100 (Other value on demand)	152	89	95	60.5	66.6	4x15.7		
¾				98	117	69.9	82.6	4x15.7	4x19.1	
1				108	124	79.2	88.9			
1¼				117	133	88.9	98.6			
1½				127	156	98.6	114.3		4x22.4	
2				152	165	121	127	4x19.1	8x19.1	~7.9
2½				178	190	139.7	149.4		8x22.4	
3				190	210	152.4	168.1			
4				229	254	190.5	200.2	8x19.1		
6				279	318	241.3	269.7	8x22.4	12x22.4	

	TS (°F/°C)	-20/-29	0/-18	200/94	300/149	400/205
PS	150# (psi/bar)	232 / 16	232 / 16	195 / 14	175 / 12	160 / 11
	300# (psi/bar)	232 / 16	232 / 16	232 / 16	232 / 16	232 / 16

[1] *vent hole connection p.5.010*
[2] *other material on request p.3.010*

SS SAMPLING VALVE
WAFER TYPE
HORIZONTAL LINE
MULTIPLE FUNCTION

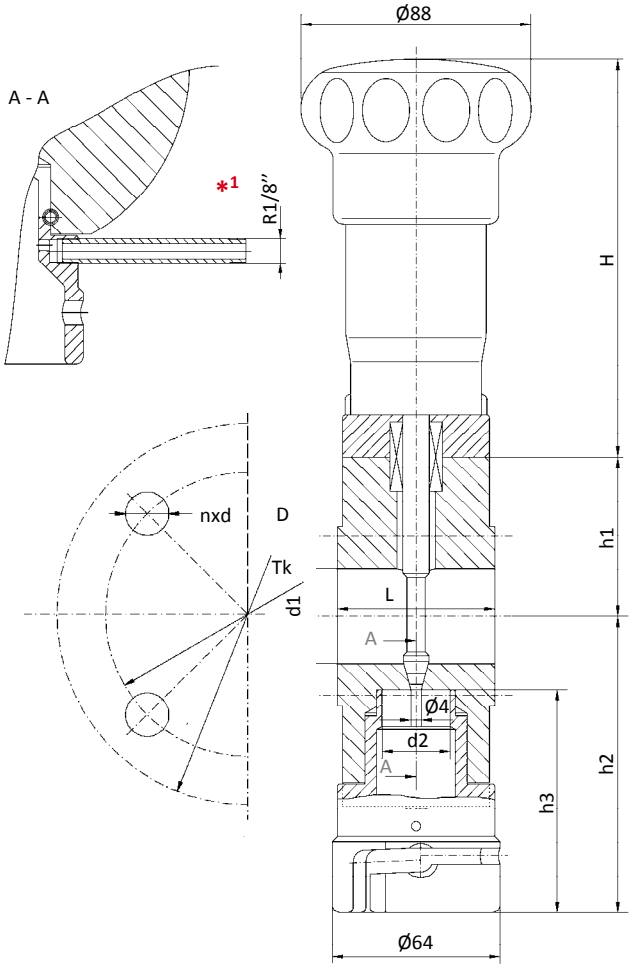

Material [3]
316L / 1.4435 / 1.4404 / PTFE

Dimensions in mm

ANSI	L	H	h1	h2	h3	d1	d2	D		Tk		nxd		kg
	150#/300#							150#	300#	150#	300#	150#	300#	
¾	60	152	54.3	110	85	24	26	-		69.9	82.6	4x15.7	4x19.1	
1			60.5	113		36		145		79.2	88.9			
1½			78	120		50		175		98.6	114.3		4x22.4	
2			85.5	126		62		189		120.7	127	4x19.1	8x19.1	
2½			95.5	134		78		220		139.7	149.4		8x22.4	
3			103	140		90		254		152.4	168.1			
4			120.5	153		116		302		190.5	200.2	8x19.1		

	TS (°F/°C)	-20/-29	0/-18	200/94	300/149	400/205
PS	150# (psi/bar)	232 / 16	232 / 16	195 / 14	175 / 12	160 / 11
	300# (psi/bar)	232 / 16	232 / 16	232 / 16	232 / 16	232 / 16

[1] *vent hole connection p.5.010*
[2] *accessories on demand*
[3] *other material on request p.3.010*

1

SS SAMPLING VALVE WITH INTEGRATED THREAD ADAPTER
WAFER TYPE
HORIZONTAL LINE
TRADITIONAL RANGE

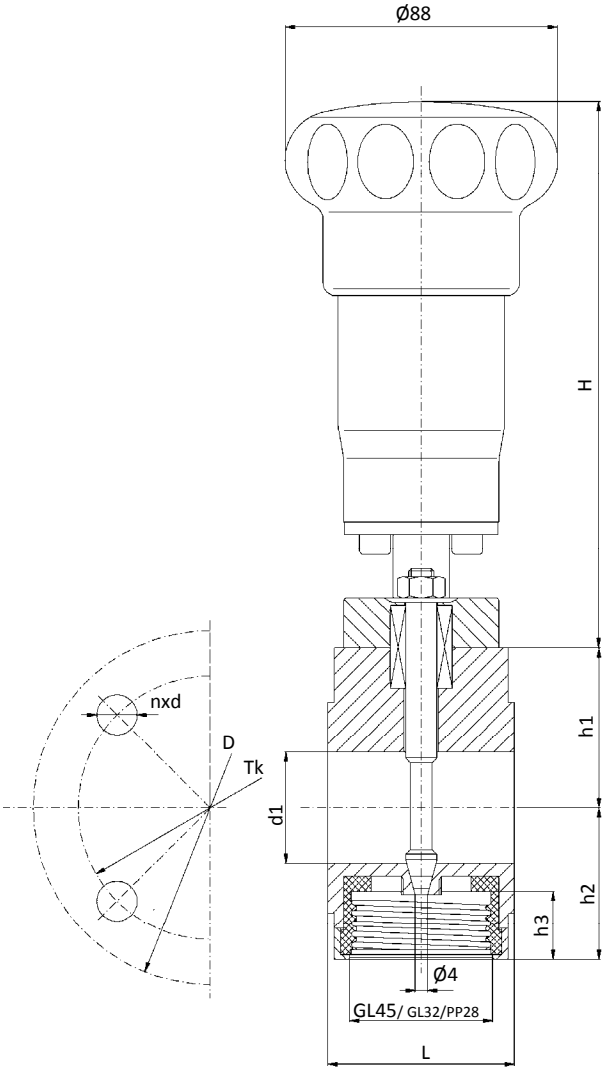

Material [1]
316L / 1.4435 / 1.4404 / PTFE

Dimensions in mm

ANSI	L	H	h1	h2	h3	d1	D		Tk		nxd		kg
	150#/300#						150#	300#	150#	300#	150#	300#	
1	60	152	51.5	43	21	36	115		79.2	88.9	4x15.7	4x19.1	
1½	60		70.5	49.5		50	150		98.6	114.3		4x22.4	
2	60		77.5	56		62	165		120.7	127	4x19.1	8x19.1	

	TS (°F/°C)	-20/-29	0/-18	200/94	300/149	400/205
PS	150# (psi/bar)	230 / 16	230 / 16	195 / 14	175 / 12	160 / 11
	300# (psi/bar)	230 / 16	230 / 16	230 / 16	230 / 16	230 / 16

[1] *other material on request p.3.010*

SS SAMPLING VALVE
WITH HEATING JACKET
HORIZONTAL LINE
(VERTICAL LINE [2])
MULTIPLE FUNCTION

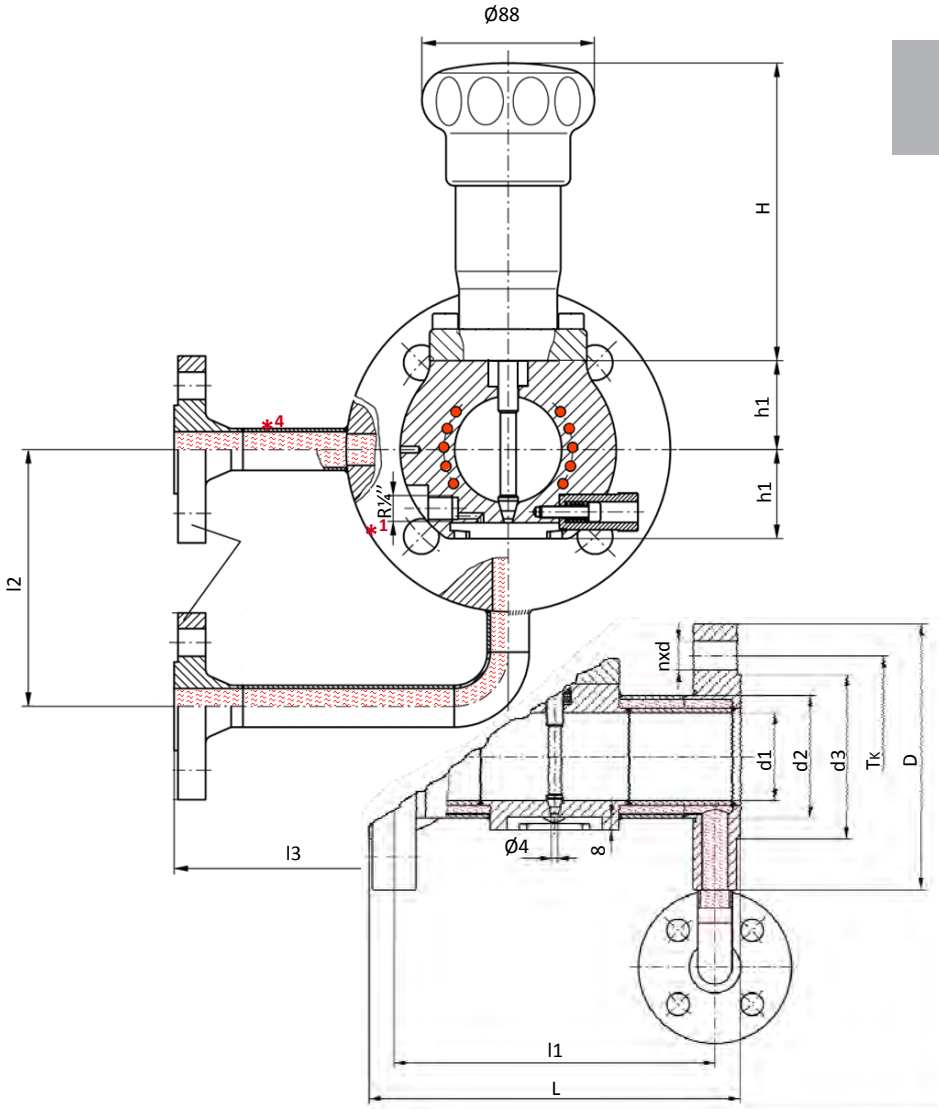

Material [3]
316L / 1.4435 / 1.4404 / PTFE

Dimensions in mm

ANSI	L	l1	l2	l3	H	h1	d1	d2	d3	D		Tk		nxd		kg
	150#/300#									150#	300#	150#	300#	150#	300#	
½	203	176	92	120	152	27	17.3	33.7	35.1	89	95	60.5	66.6	4x15.7		
1			106			320	28.5	48.3	50.8	108	124	79.2	88.9	4x15.7	4x19.1	7.3
1½			111			40	43.1	76.1	73.2	127	156	98.6	114.3		4x22.4	
2			123			45	54.5		91.9	152	165	120.5	127	4x19.1	8x19.1	
3			---	170		59	82.5	114.3	127	190	210	152.4	168.1		8x22.4	
4	229	141	202			72	107	---	139.7	229	254	190.5	200.2	8x19.1		

	TS (°F/°C)	<100 / <40	200 / 100	300 / 150	400 / 200
PS	**150lbs** (psi/bar)	232 / 16	195 / 14	175 / 12	160 / 11
	300lbs (psi/bar)	232 / 16	232 / 16	232 / 16	232 / 16

*4 HEATING JACKET		
½'' / 150lbs	PS: 160psi @ 400°F TS: -20 / 400°F	(11bars @200°C)
½'' / 300lbs	PS: 415psi @ 400°F TS: -20 / 400°F	(28bars @200°Cc)

[1] *vent hole connection p.5.010*
[2] *for ex. with elbow adapter p.4.020*
[3] *other material on request p.3.010*

SS SAMPLING VALVE
WITH HEATING JACKET
VERTICAL LINE
MULTIPLE FUNCTION

Material [2]
316L / 1.4435 / 1.4404 /PTFE

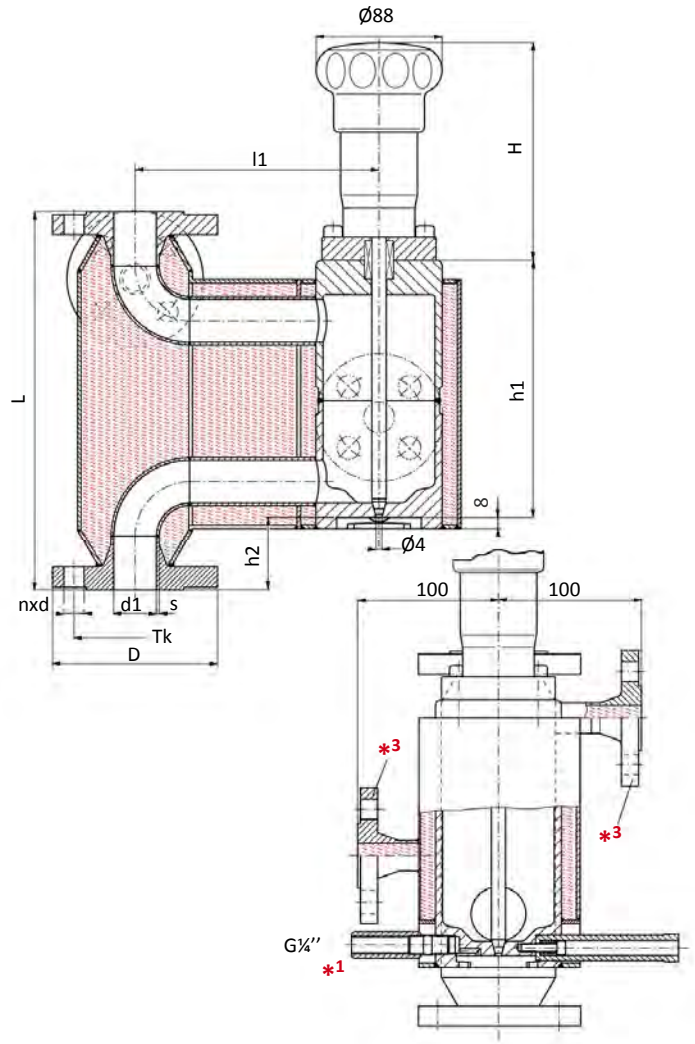

Dimensions in mm

ANSI	L	H	l1	h1	h2	s	d1	D		Tk		nxd		kg
	150#/300#							150#	300#	150#	300#	150#	300#	
½	268	152	170	179	44	1.6	18.1	89	95	60.5	66.6	4x15.7		
1	296				52	2	29.7	108	124	79.2	88.9	4x15.7	4x19.1	
1½	332		210		67		44.3	127	156	98.6	114.3		4x22.4	
2	365				67	2.6	55.1	152	165	120.7	127	4x19.1	8x19.1	
3	478		240	241	113		83.7	190	210	152.4	168.1		8x22.4	
4	599		290	298	298		109.1	229	254	190.5	200.2	8x19.1		

	TS (°F/°C)	<100 / <40	200 / 100	300 / 150	400 / 200
PS	**150#** (psi/bar)	232 / 16	195 / 14	175 / 12	160 / 11
	300# (psi/bar)	232 / 16	232 / 16	232 / 16	232 / 16

*3 HEATING JACKET	
½'' / 150lbs	PS: 160psi @ 400°F TS: -20 / 400°F (11bars @200°C)
½'' / 300lbs	PS: 415psi @ 400°F TS: -20 / 400°F (28bars @200°C)

[1] *vent hole connection p. 5.010*
[2] *other material on request p.3.010*

SS SAMPLING VALVE
WITH HEATING JACKET
LATERAL ASSEMBLY
MULTIPLE FUNCTION

Material [2]
316L / 1.4435 / 1.4404 / PTFE

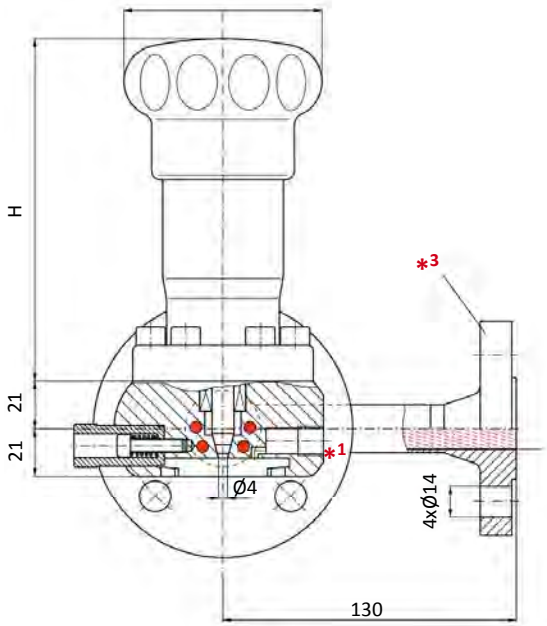

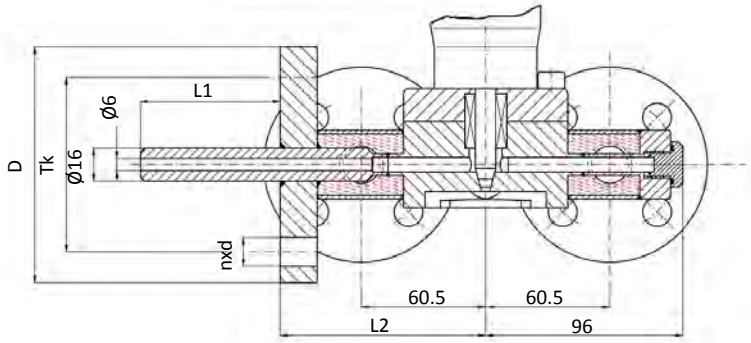

Dimensions in mm

ANSI	L1	L2	H	s	D		Tk		nxd		kg
	150#/300#				150#	300#	150#	300#	150#	300#	
½	100 (Other value on demand)	100 (Other value on demand)	152	---	89	95	60.5	66.6	4x15.7		
¾					98	117	69.9	82.6	4x15.7	4x19.1	
1					108	124	79.2	88.9			
1¼					117	133	88.9	98.6			
1½					127	156	98.6	114.3		4x22.4	
2					152	165	121	127	4x19.1	8x19.1	~7.9
2½					178	190	140	149.4		8x22.4	
3					190	210	152	168.1			
4					229	254	191	200.2	8x19.1		
6					279	318	241.3	269.7	8x22.4	12x22.4	

	TS (°F/°C)	<100 / <40	200 / 100	300 / 150	400 / 200
PS	150#	232 / 16	195 / 14	175 / 12	160 / 11
	300#	232 / 16	232 / 16	232 / 16	232 / 16

*3 HEATING JACKET	
½'' / 150lbs	PS: 160psi @ 400°F TS: -20 / 400°F
½'' / 300lbs	PS: 415psi @ 400°F TS: -20 / 400°F

[1] *vent hole connection p. 5.010*
[2] *other material on request p.3.010*

BIAR Sampling Systems

TECHNICAL SHEET

ECB

1

SS SAMPLING VALVE
WITH HEATING JACKET
WAFER TYPE
HORIZONTAL LINE

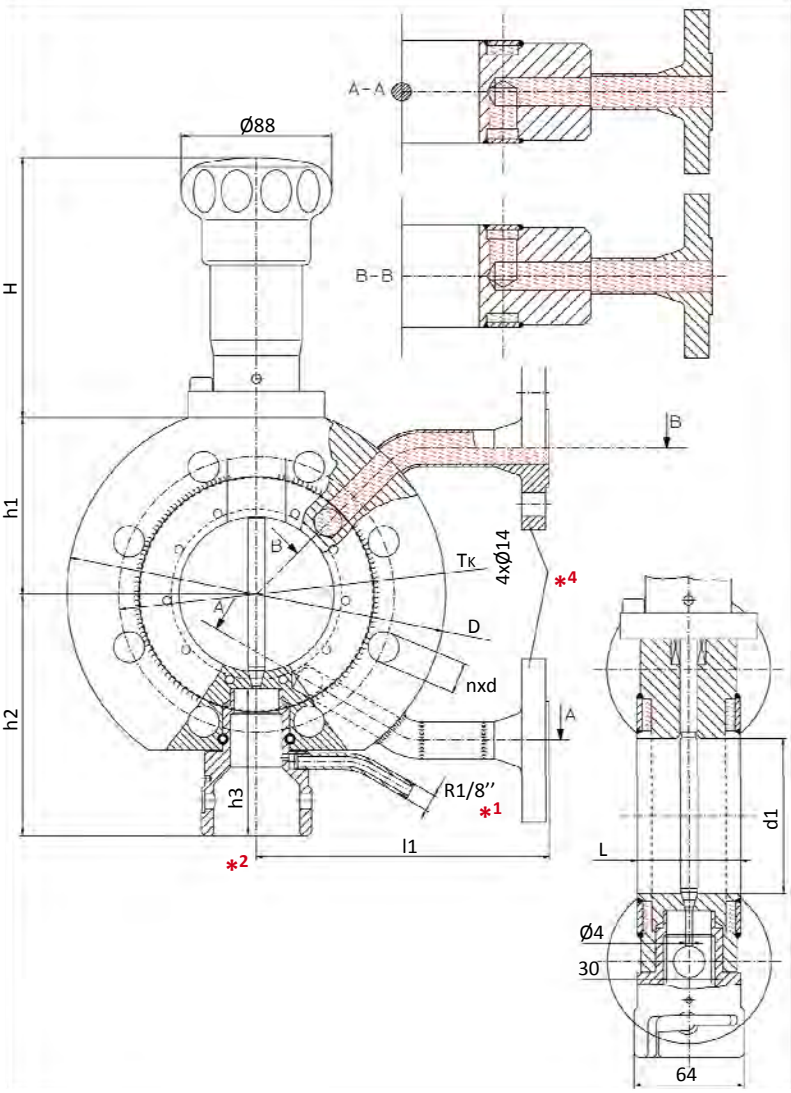

Material [3]
316L / 1.4435 / 1.4404 / PTFE

Dimensions in mm

DIN – EN														
DN	H	h1	h2	h3	L	l1	d1	D		Tk		nxd		kg
	PN16/40							PN16	PN40	PN16	PN40	PN16	PN40	
25	152	60.5	113	85	60	178.5	36	145				4x14		
50		85.5	126			183.8	62	189				4x18		
80		103	140			203	90	220				8(4)x18	8x18	
100		120.5	153			216.5	254	254				8x18	8x22	

	TS (°F/°C)	<100 / <40	200 / 100	300 / 150	400 / 200
PS	150lbs	232 / 16	195 / 14	175 / 12	160 / 11
	300lbs	232 / 16	232 / 16	232 / 16	232 / 16

*4 HEATING JACKET	
½'' / 150lbs	PS: 160psi @ 400°F TS: -20 / 400°F (11bars @200°C)
½'' / 300lbs	PS: 415psi @ 400°F TS: -20 / 400°F (28bars @200°Cc)

[1] *vent hole connection p.5.010*
[2] *accessories on demand*
[3] *other material on request p.3.010*

PFA LINED VALVES

2

SAMPLING VALVE WITH PFA LINING
WITH FLANGES
HORIZONTAL LINE
(VERTICAL LINE [2])
MULTIPLE FUNCTION

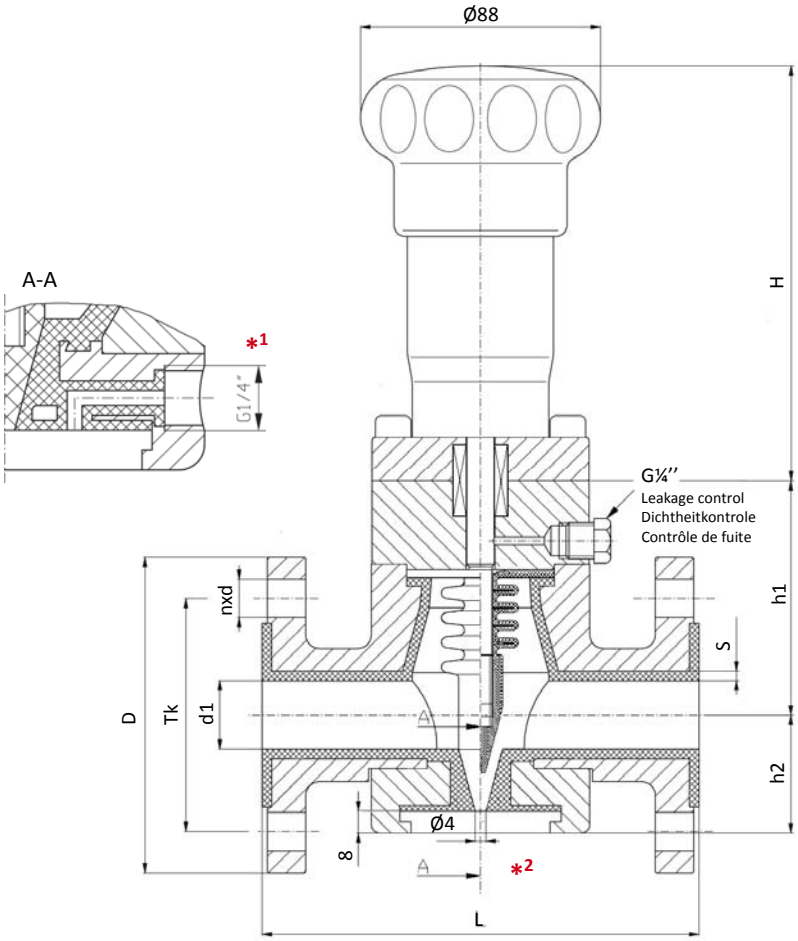

Dimensions in mm

Material [3]
EN-JS1049 (Ductile iron) / PFA

ANSI	L	H	h1	h2	s	d1	D	Tk	nxd	kg
	150#						150#	150#	150#	
½	127 (130)	152	75	19	3.5	15	89	60.5	4x15.7	5.9
1	127		85	25		25	108	79.2		7.3
1½	165		103	32		40	127	98.6		9.5
2	178		110	37.5		50	152	120.7	4x19.1	11.2
3	203		128	52		80	190	152.4		16.2
4	229		142	64.5		100	229	190.5		19.7

	TS (°F/°C)	356/180 max
PS	150# (psi/bar)	166/11.5

[1] *vent hole connection p.5.010*
[2] *for ex. with elbow adapter p.4.020*
[3] *other material on request p.3.010*

OPTION : heating jacket p.5.050

SAMPLING VALVE WITH PFA LINING
WAFER TYPE
HORIZONTAL LINE
MULTIPLE FUNCTION

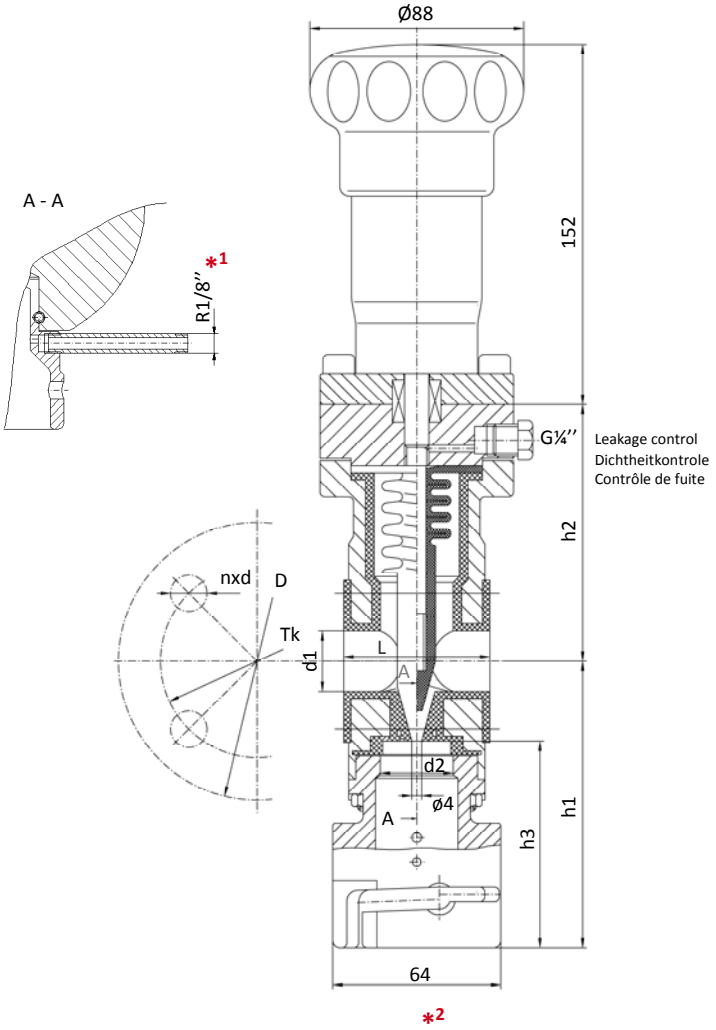

Material
316L / 1.4435 / 1.4404
PFA

Dimensions in mm

ANSI	L	H	h1	h2	h3	d1	d2	D	Tk	nxd	kg
	ANSI										
	150#							150#	150#	150#	
1	60	152	99.5	118	85	25	26	115	79.2	4x15	
2			146.5	131.5		50		165	120.7	4x19	

	TS (°F/°C)	356/180 max
PS	150# (psi/bar)	166/11.5

[1] *vent hole connection p.5.010*
[2] *accessories on demand*

2

SAMPLING VALVE WITH PFA LINING
WITH INTEGRATED THREAD ADAPTER
WAFER TYPE
HORIZONTAL LINE
TRADITIONAL RANGE

Material
316L / 1.4435 / 1.4404
PFA

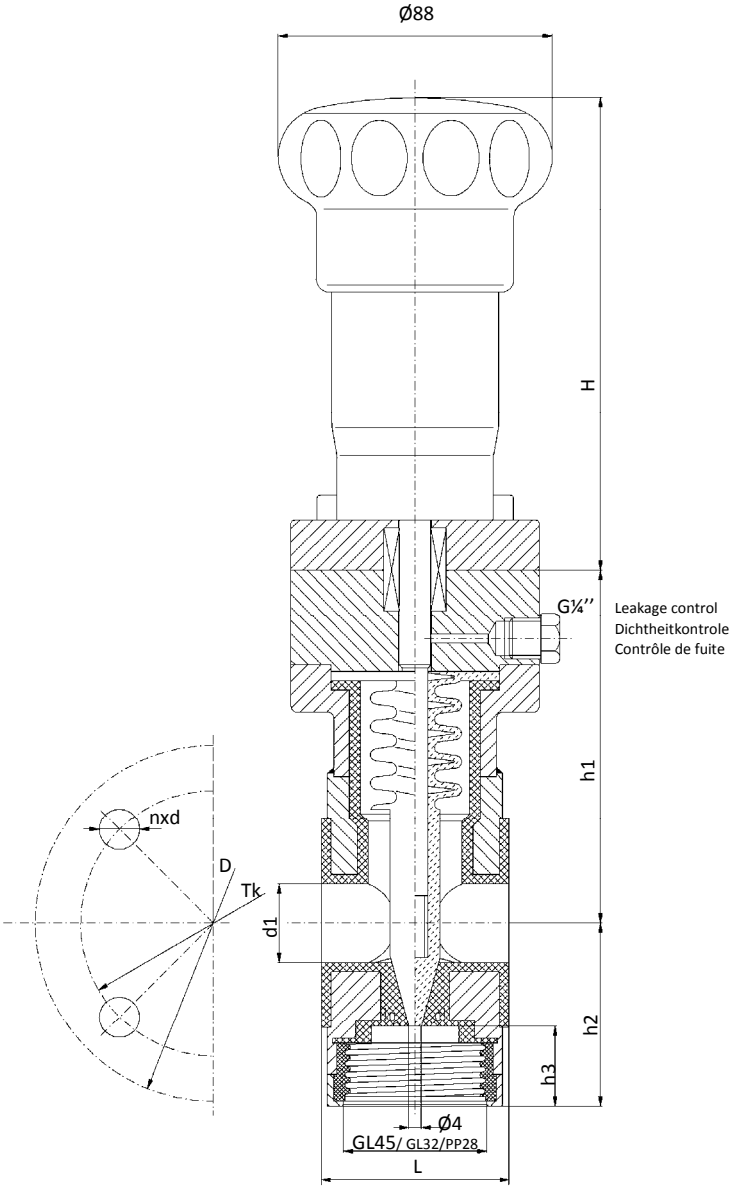

Dimensions in mm

ANSI													
ANSI	L	H	h1	h2	h3	d1	D		Tk		nxd		kg
	150#/300#						150#	300#	150#	300#	150#	300#	
1	60	152	90.5	48.5	15	25	115		79.2	88.9	4x15.7	4x19.1	
2			124	56.5	10	50	165		120.7	127	4x19.1	8x19.1	

	TS (°F/°C)	356/180 max
PS	150# (psi/bar)	166/11.5

VARIANTS (MATERIALS, ACTUATORS,...)

MATERIALS

INFOS

316L / 1.4404 / 1.4435
304L / 1.4306 / 1.4307
904L / 1.4539
HASTELLOY®
MONEL®
TANTAL
TITANE
ZIRCONIUM
DUPLEX
STELLITE®

other material on request

STUFFING BOX

TA-LUFT

Material
316L / 1.4435/1.4404/ …

Simple (SP)

T. / Material

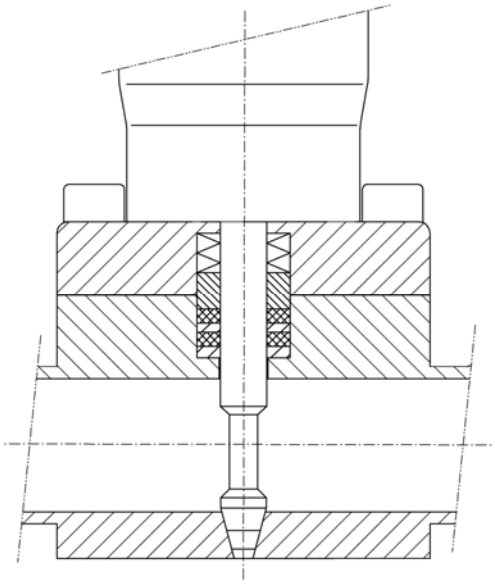

°C	°F	max		
400	752			
300	572			
280	536			
250	482			
200	392	PTFE	PTFE Carbon	GRAPHITE
190	374			
180	356			
150	302			
100	212			
50	122			
0	32			
-10	14			
-20	-4			
-40	-40			
Temp.		min		

Double (DP)

T. / Material / O-RING

S

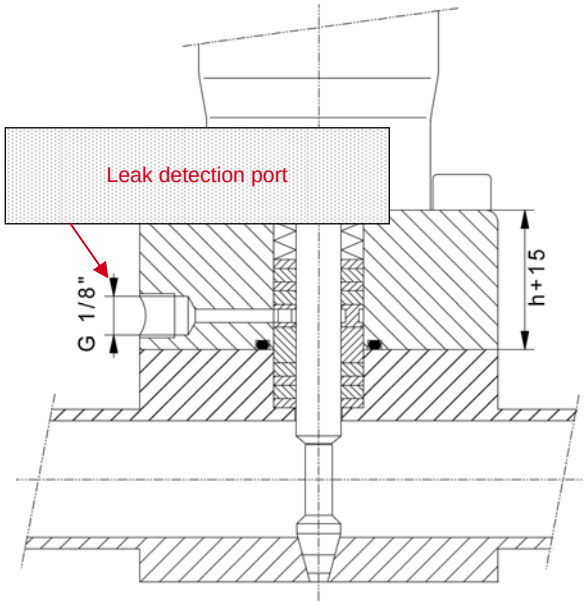

°C	°F	max		
326	620			
300	572			
280	536			
250	482			
200	392	PTFE / FEP	PTFE Carbon / FFKM	GRAPHITE / KALREZ 7075
190	374			
180	356			
150	302			
100	212			
50	122			
0	32			
-10	14			
-20	-4			
-40	-40			
Temp.		min		

O-RING

BELLOWS SEAL

TA-LUFT

Material
316L / 316Ti / 1.4571/1.4435/1.4404

3

PN40

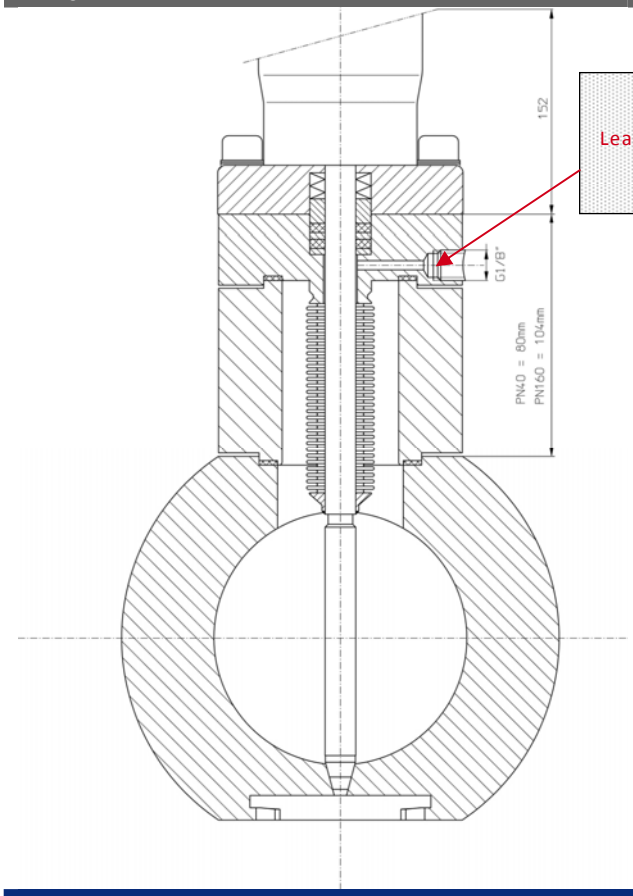

T. / Material

°C	°F	max		
400	752			
300	572			
280	536			
250	482			
200	392	PTFE	PTFE Carbon,	GRAPHITE
190	374			
180	356			
150	302			
100	212			
50	122			
0	32			
-10	14			
-20	-4			
-40	-40			
Temp.		min		

OPTIONS

PN160

PN160 PS max. = 70 bars (1015 psi)

STEM GASKET

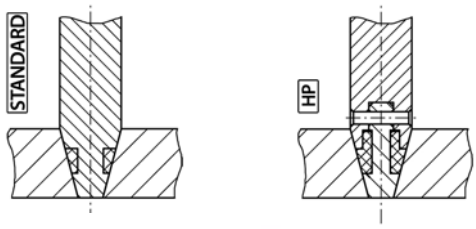

OUTLET DIAMETER

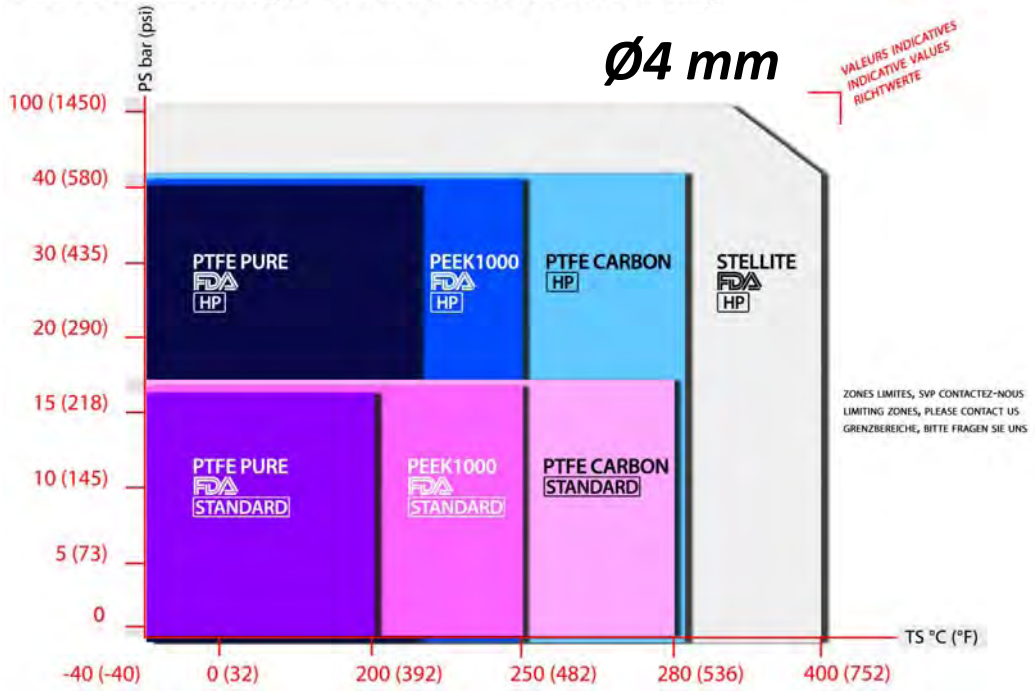

OUTLET DIAMETER

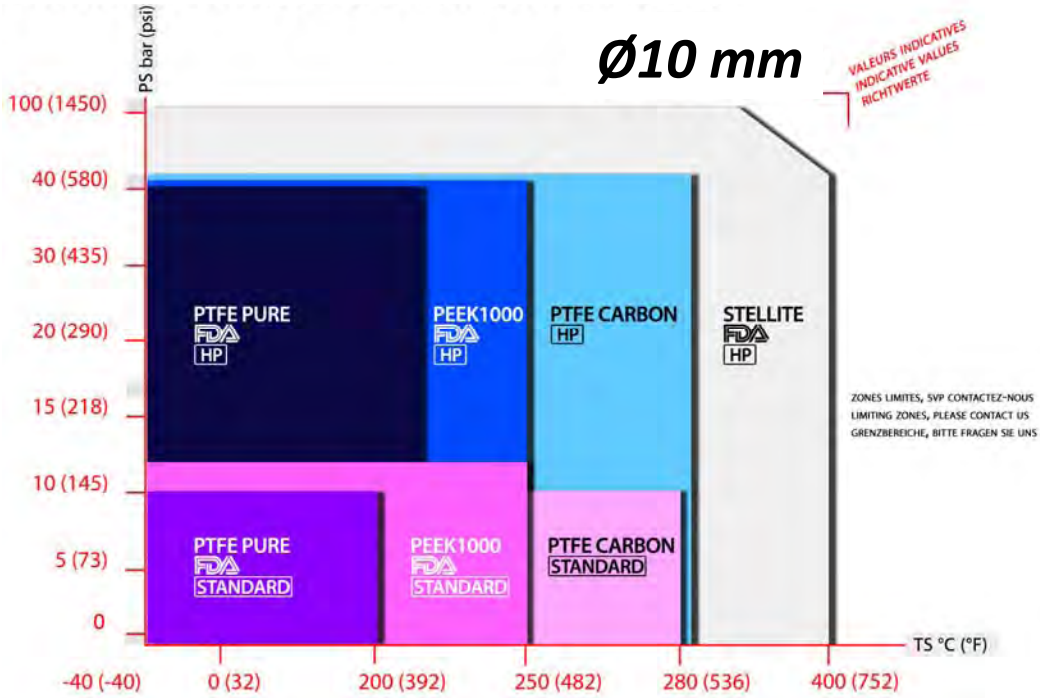

VMB

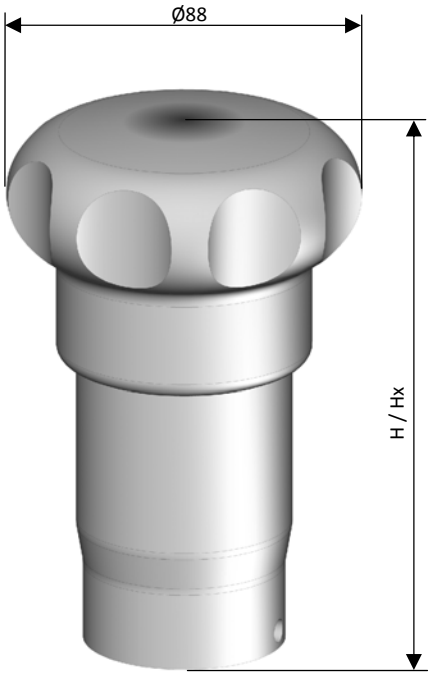

SPRING TO CLOSE HAND WHEEL
(MAGIC WHEEL)

MATERIAL
316L / 1.4435 / 1.4404

	°C	°F
T min.	-20	-4
T max.	+200	+392

	H	Hx
Multifunct. Syst	152	
Tradition. Syst.		176

IP CODE
INTERNATIONAL STANDARD IEC 60529
PROTECTION RATING **IP67**

OPTIONS

PFA PROTECTION (VPB)	KEY LOCK (VVB)	STROKE LIMITER (VLB)
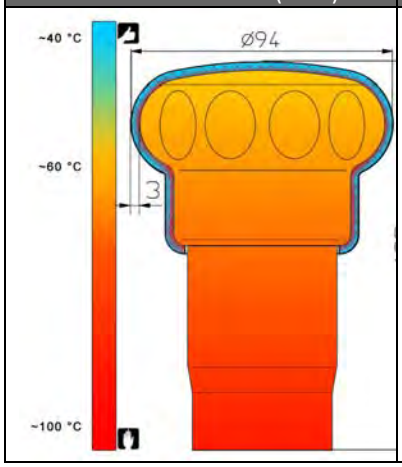	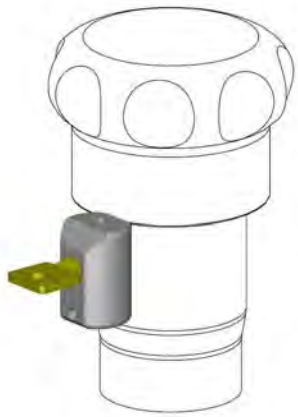	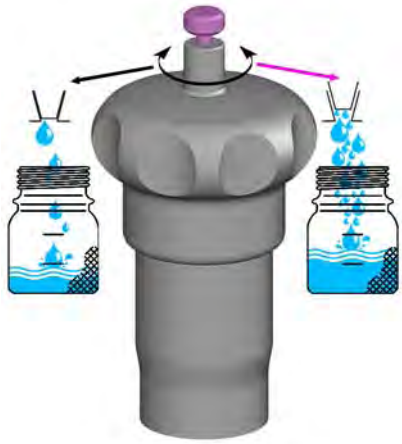

Option T. > 200°C (+392 °F) : 100mm Extension p.**5.040**

SPRING TO CLOSE HAND LEVER

Material
316L / 1.4435 / 1.4404 / PP

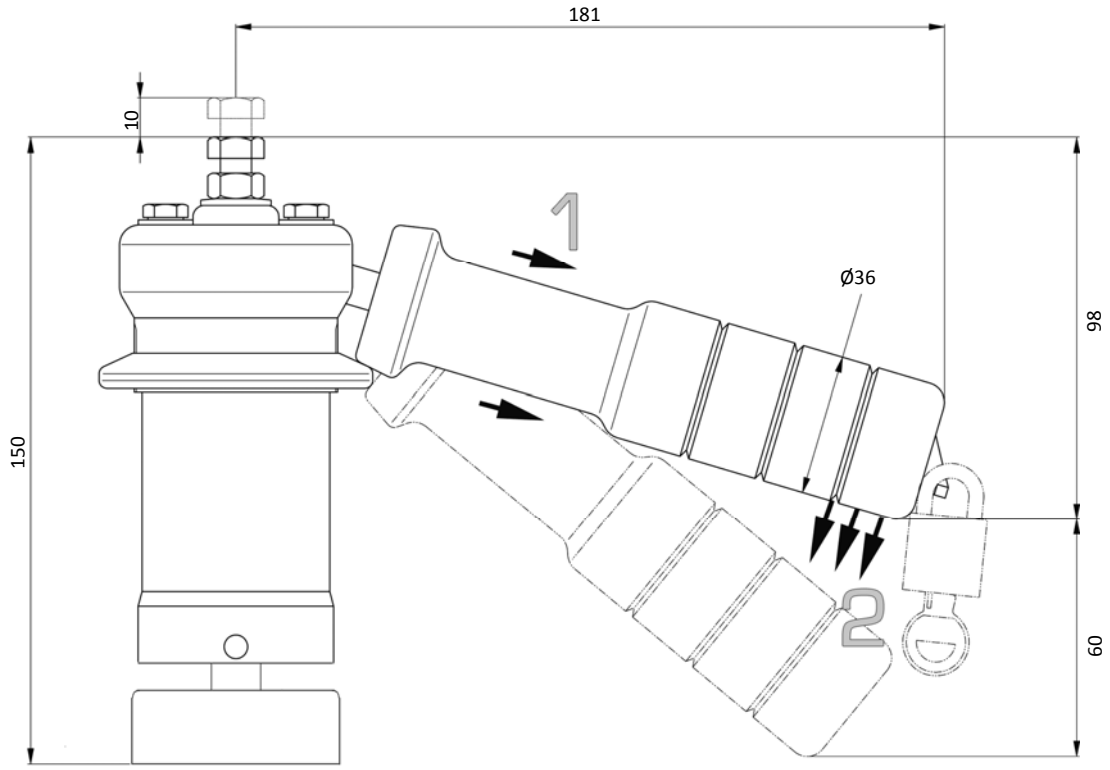

OPTION

KEY LOCK

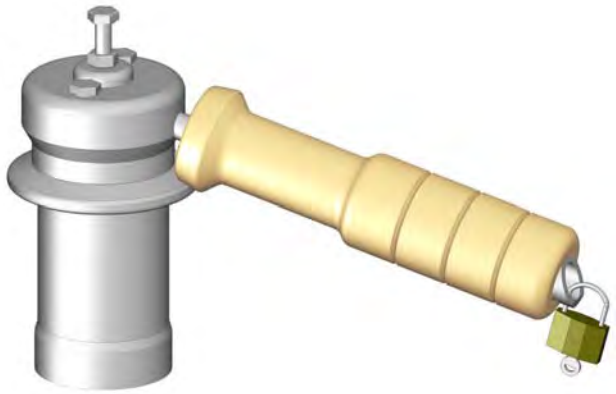

Option T. > 200°C (+392 °F) : 100mm Extension p. **5.040**

PNEUMATIC DRIVE

Material
^316L / 1.4435 / 1.4404

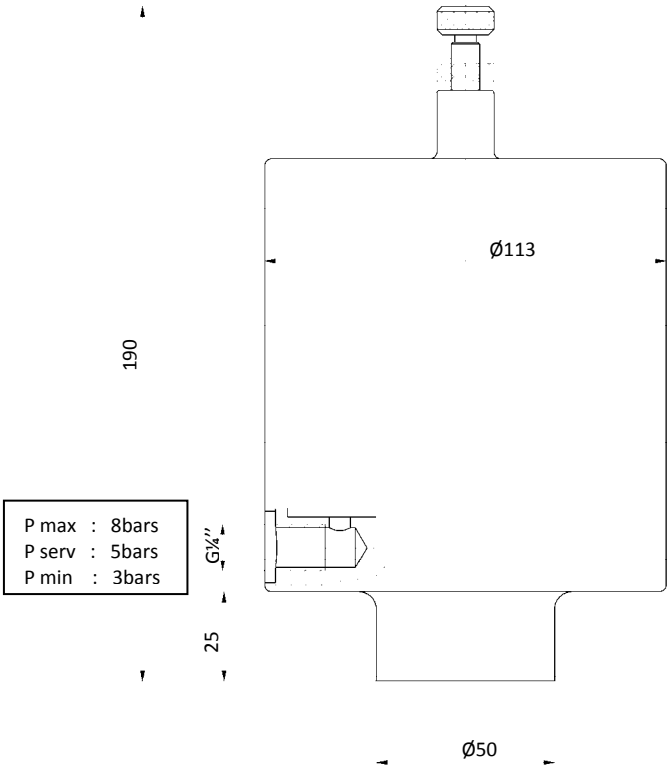

T min.	°C (°F)	-20 (-4)
T max		+200 (+392)

MANUAL HAND WHEEL

Material
316L / 1.4435 / 1.4404 / …

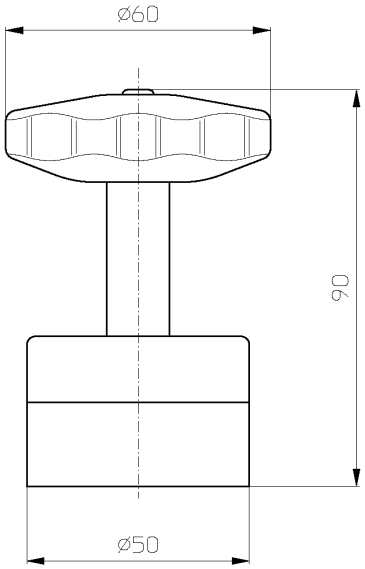

Option T. > 200°C (+392 °F) : 100mm Extension p. **5.040**

ACCESSORIES

THREAD ADAPTER
FOR LABORATORY BOTTLE

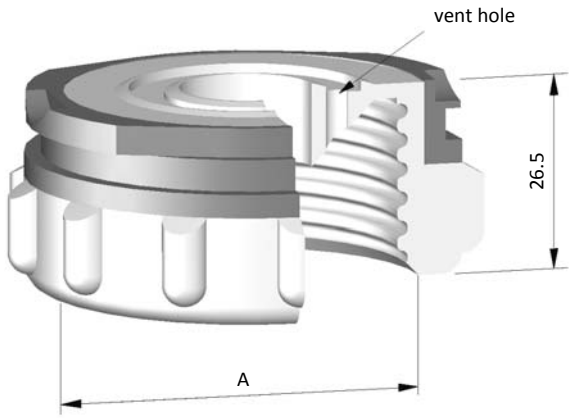

Material [1]
304L / 1.4301 / PFA / antistat. PFA

A
GL45
GL32
PP28
OTHER ON REQUEST

OPTION :

SAFETY PLUG
FOR THREAD ADAPTER

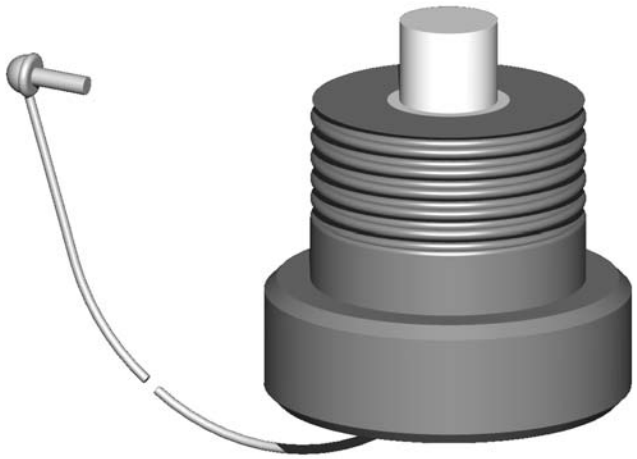

Material [1]
PP / PTFE

[1] *other material on request*

ELBOW ADAPTER
FOR LABORATORY BOTTLE

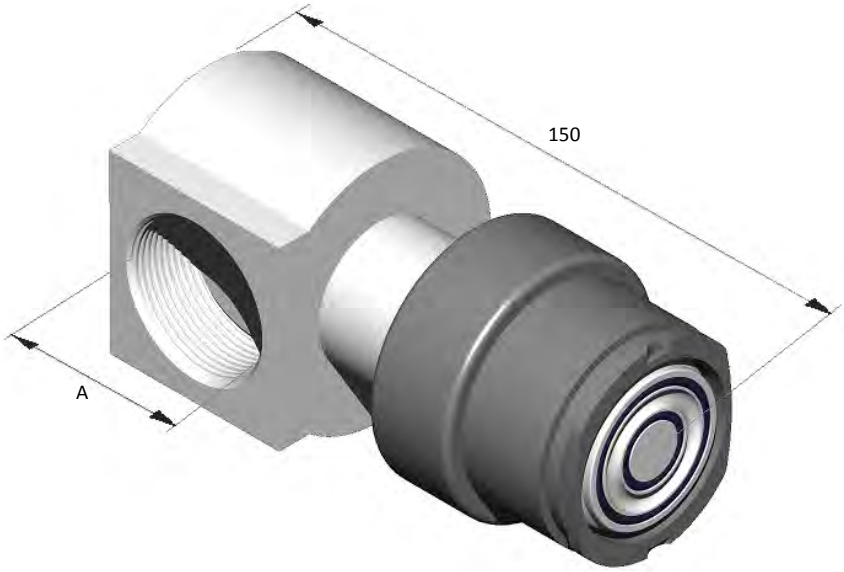

Material [1]
304L / 1.4301 / PTFE

A
GL32
GL45
PP28
OTHER ON REQUEST

[1] *other material on request*

BOTTLE HOLDER
FOR LABORATORY BOTTLE

Material [1]
1.4301 / PTFE / LUBRIFLON® 225
(PTFE + 25% CARBON)

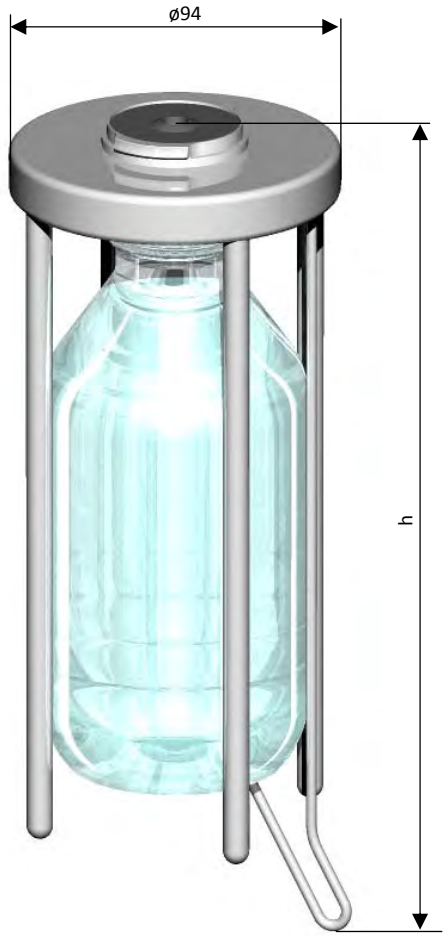

Volume / Capacity / Inhalt	Dimensions / Abmessungen
ml	**h (mm)**
50	140
100	150
250	200
500	230
1000	300

OPTIONS	
Bottle heat protection	**p. 5.060**
Splash protection	**p. 5.070**

INFOS	
Bottle	**p. 5.020**

[1] *other material on request*

NEEDLE ADAPTER WITH BOTTLE HOLDER
FOR SEPTUM BOTTLE

Material [1]
PTFE / FEP / FPM (Viton®) / FFKM (Kalrez®)

Needles:
316L / 1.4404 / Hastelloy® C276

Volume / Capacity / Inhalt	Dimensions / Abmessungen
ml	**h (mm)**
50	150
100	163
250	203
500	240
1000	290

OPTIONS	
Bottle heat protection	**p. 5.060**
Splash protection	**p. 5.070**

INFO	
Bottle	**p. 5.020**

[1] *other material on request*

ADJUSTABLE PLATE SUPPORT
WITH THREADLESS OR NEEDLE ADAPTER

Material [1]
1.4301 / PFA / PP

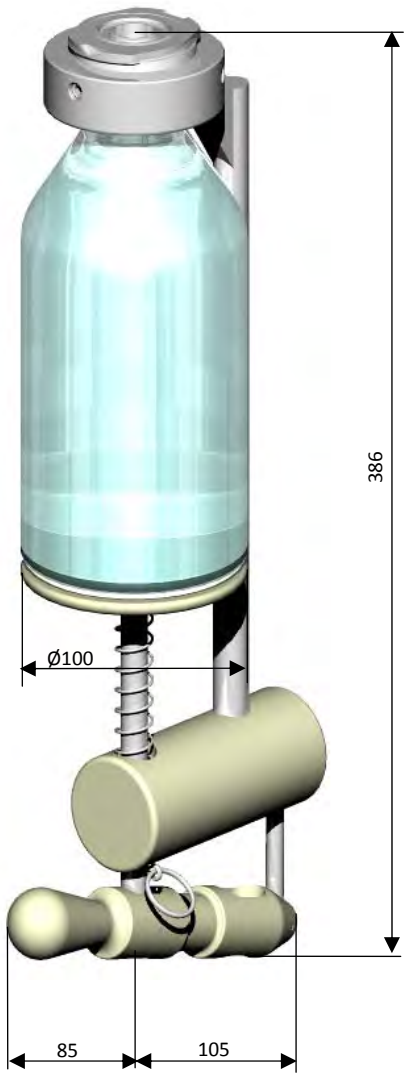

OPTION	
Safety plug	p. **4.010**
Bottle heat protection	p. **5.060**
Splash protection	p. **5.070**

INFO	
Bottle	p. **5.020**

[1] *other material on request*

PROTECTION BOX
100 / 250 ML

Material [1]
316L / 1.4435 / 1.4404 /
PFA / FEP / VITON / KALREZ / BOROSILICATE

PS	**0.01 -> 6 bars** **0.15 -> 87psi**
TS	**150°C (302°F)**

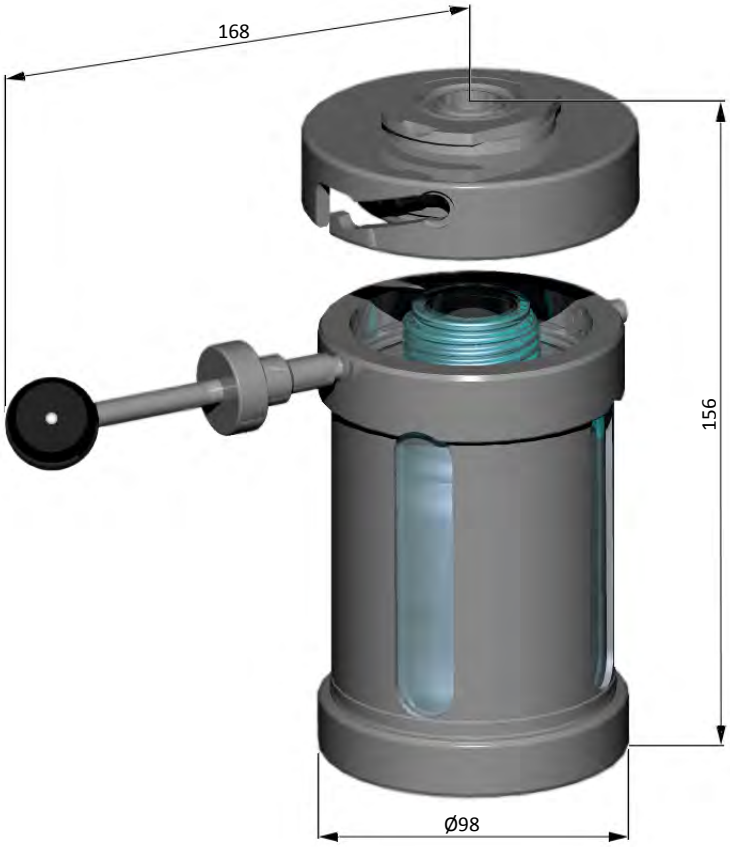

INFO	
Bottle	**p. 5.020**

[1] *other material on request*

BOTTLE HEAT PROTECTION
FOR SCHOTT BOTTLES 100/250ML

ADAPT.
GL45
OTHER ON REQUEST

Material
PTFE / VITON

INFO	
Bottle	p. **5.020**

SAFETY CABINET

Material [4]
Stainless steel

Other dimensions on request

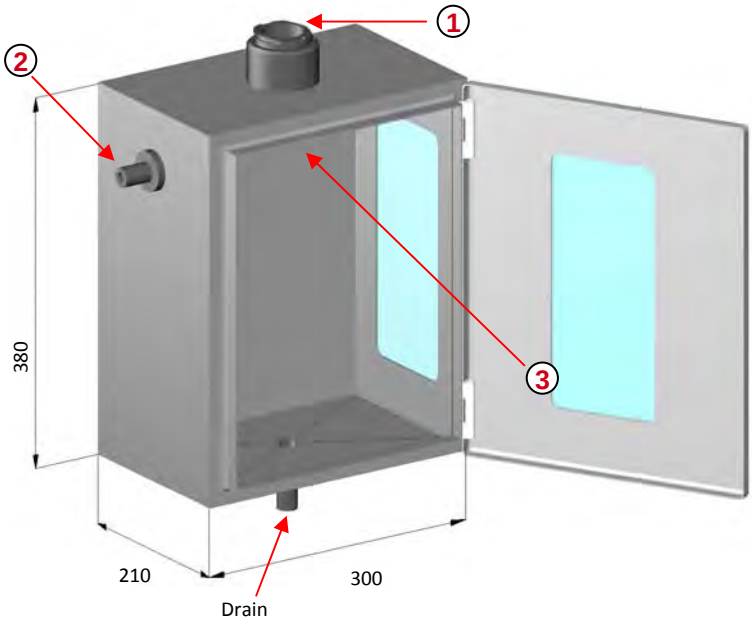

OPTIONS

1 Thread adapter with quick connection

ADAPT.	Face to Face
MFE-FAE	500mm
MFR-FAR	EN (DIN) / ANSI

2 Exhaust / vent

3 Accessories

Adapters

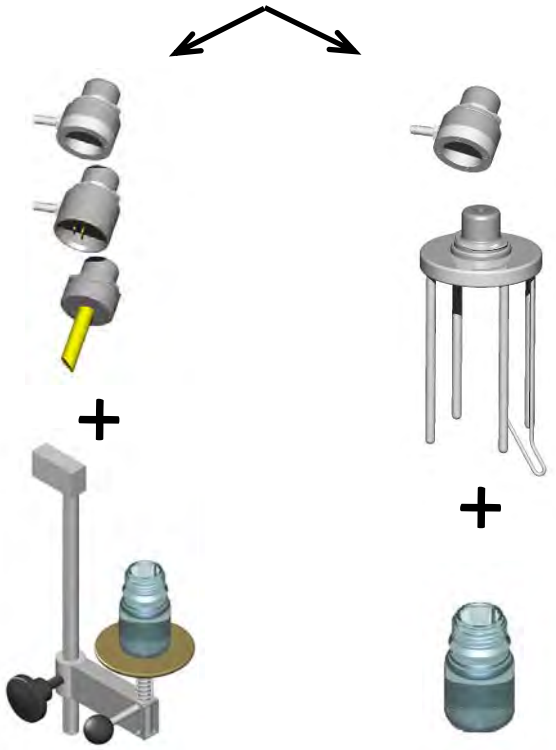

Thread adapter

Adjustable plate support

Bottle holder or needle adapter

[4] *other material on request*

REVO BOX
BOTTLE
100 – 1000 ML

CLOSED SAMPLING
BOTTLE CAP CAN BE SCREWED WITHOUT EXPOSURE / WITHIN THE DEVICE

Material
on demand

INFO

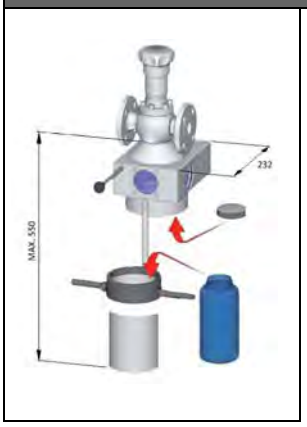

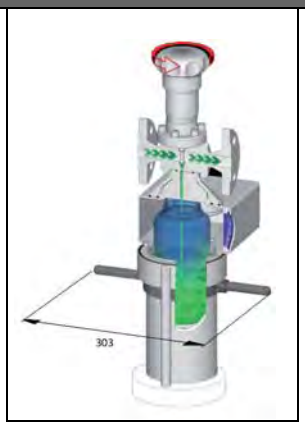

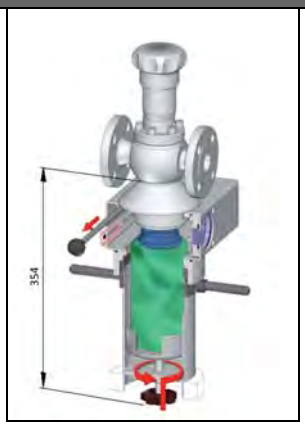

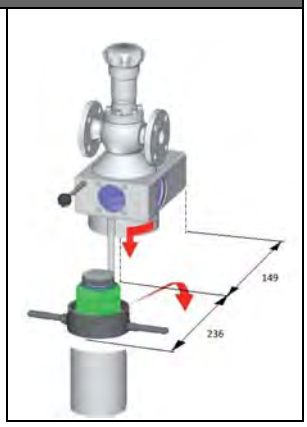

PISTON INJECTOR
FOR MULTIFUNCTION VALVES

Material [1]
316L / 1.4435 / 1.4404 /
PP / PTFE / VITON / KALREZ

Capacity
50 ml
100 ml

Advantage
Easy cleaning

OPTIONS	
PFA coated	**ZSP**
Laboratory support	**p. 4.120**

[1] *other material on request*

CONTAINER
FOR MULTIFUNCTION VALVES

Material [1]
316L / 1.4435 / 1.4404 / FEP / PTFE

Capacity
50 ml
100 ml
300 ml

Other dimensions
On request

Advantage
Easy cleaning

VARIANTS	
With sight glass ≥ **300 ml**	**ZLV**

OPTIONS	
Heat protection	
Laboratory support	p. **4.120**

[1] *other material on request*

LABORATORY SUPPORT
FOR PISTON INJECTOR OR CONTAINER

Material
1.4301

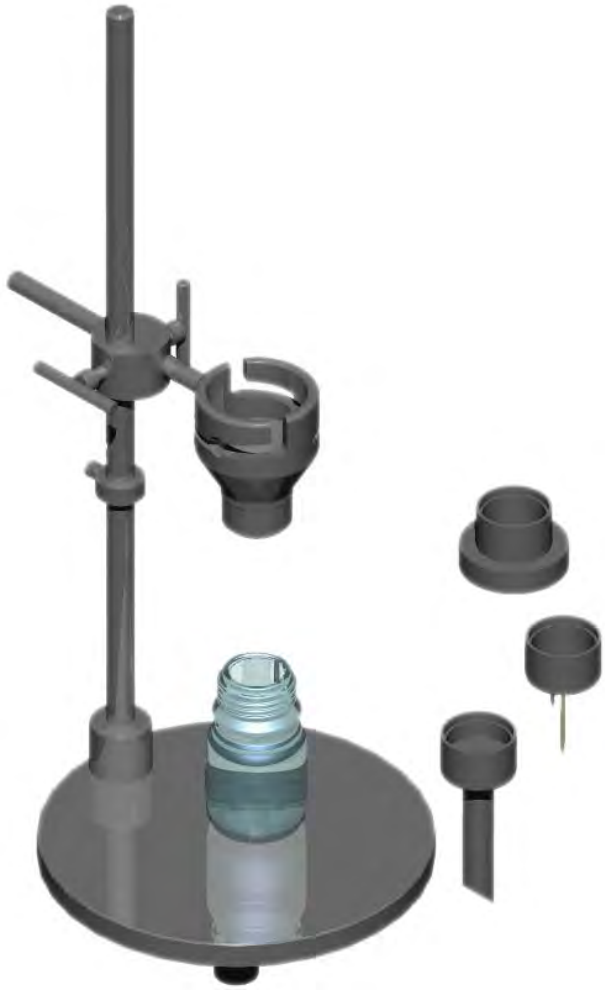

INFO	
Piston injector	**p. 4.100**
Container	**p. 4.110**
Bottle	**p. 5.020**

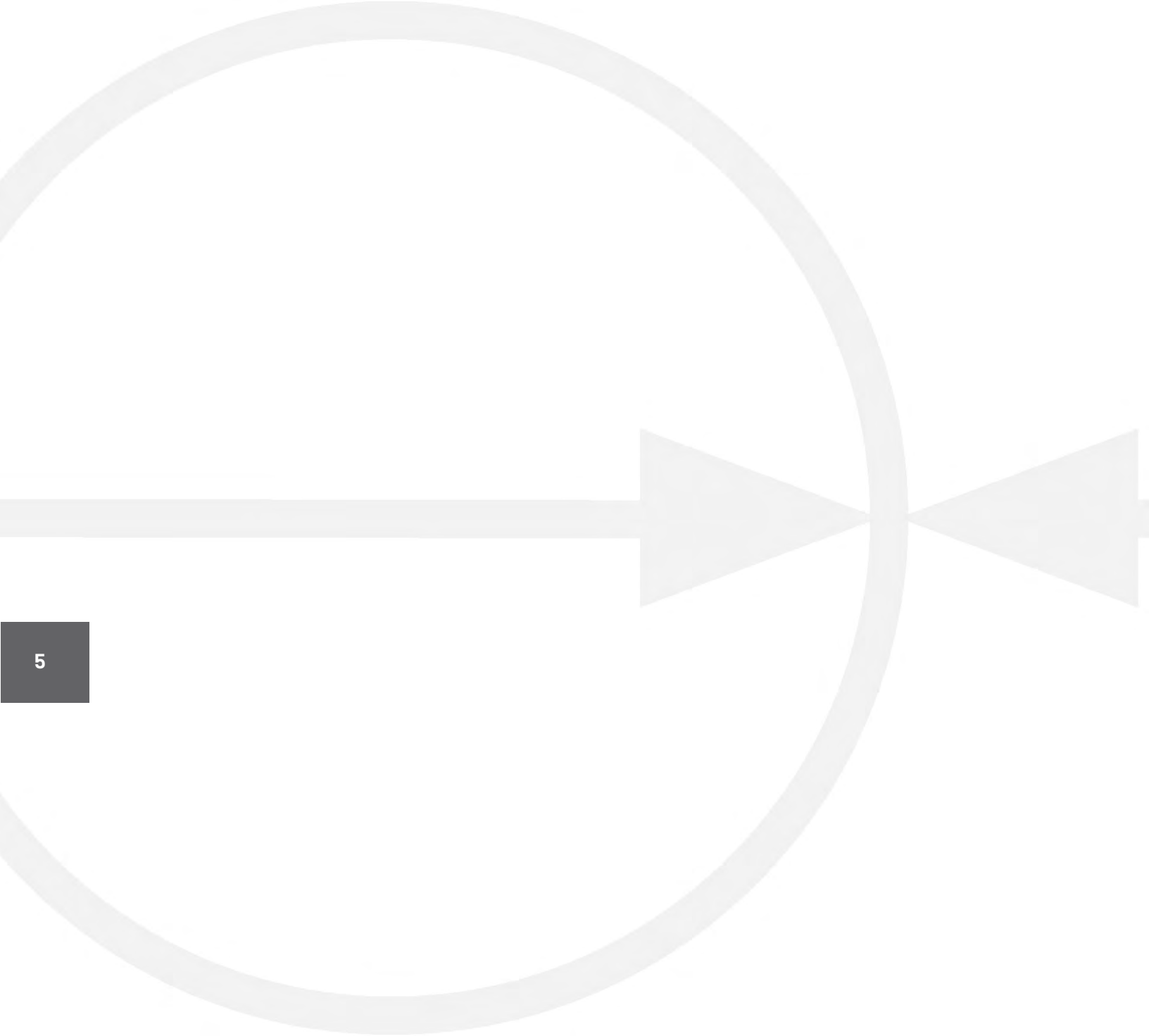

OPTIONS

CONNECTIONS

VENT / RINSING

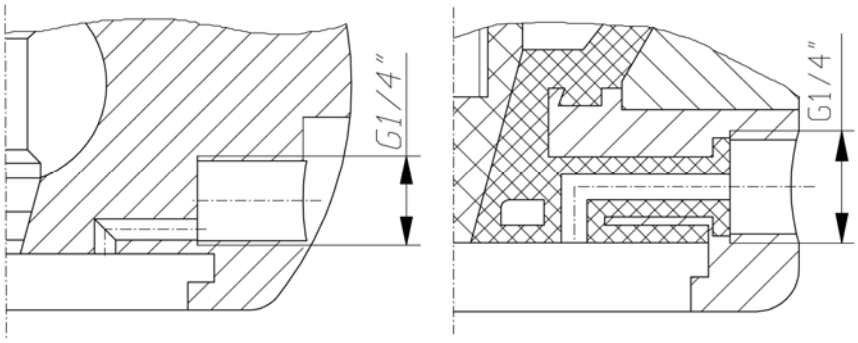

1	2	3
Hose nipple 316L / 1.4404 / 1.4435 / PVDF	**Elbow connection 90°** 316L / 1.4404 / 1.4435 / PFA	**Tube connexion** 316L / 1.4404 / 1.4435

4	5	6
Flange connexion 316L / 1.4404 / 1.4435	**Check valve** 316L / 1.4404 / 1.4435	**Plug** 316L / 1.4404 / 1.4435

7	8	9
Ball Valve 316L / 1.4404 / 1.4435 / PVDF	**Integral Bonnet Needle Valve** 316L / 1.4404 / 1.4435	**Ball valve** 316L / 1.4404 / 1.4435

10		
Active carbon filter + connexion R¼ 316L / 1.4404 / 1.4435		

Other accessories on demand

LABORATORY BOTTLE
SCHOTT DURAN®

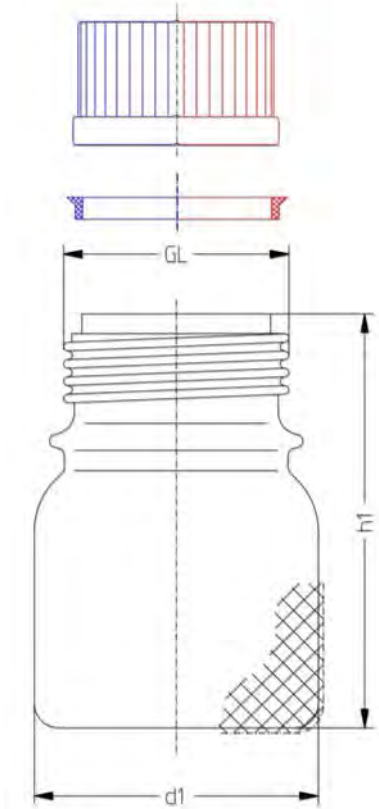

Material
Borosilicate glass

OPTIONS:
- Plastic coated glass
- „Pressure plus“

Dimensions			
ml	**GL** (ISO)	**h1** (mm)	**d1** (mm)
50	32	88	46
100	45	100	56
250		138	70
500		176	86
1000		225	101

OPTIONS / OPTIONEN			
SCREW CAP			
T.max 140°C (284°F)	**T.max 180°C** (356°F)	**SEPTUM T.max 180°C** (356°F)	**T.max 260°C (500°F)**
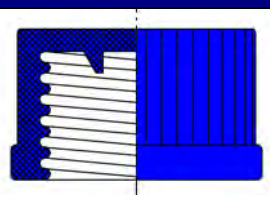	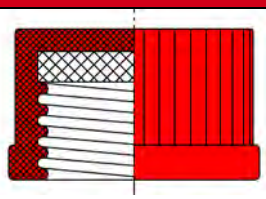	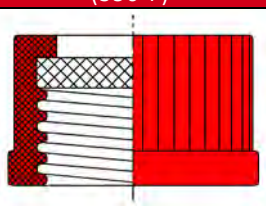	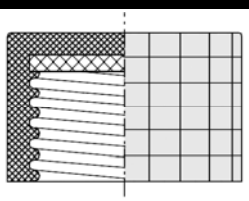
PP 140°C (284°F)	Melamine resin		**Premium** TPCh260 / PTFE (260°)
	EPDM / PTFE 180°C (356°F)	Silicon + PTFE 200°C (392°F)	
POURING RING			
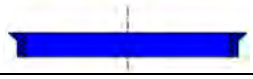	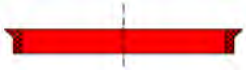		
PP	ETFE	TPCh260	

NITROGEN RINSING SYSTEM
FOR ALL TYPES OF VALVES

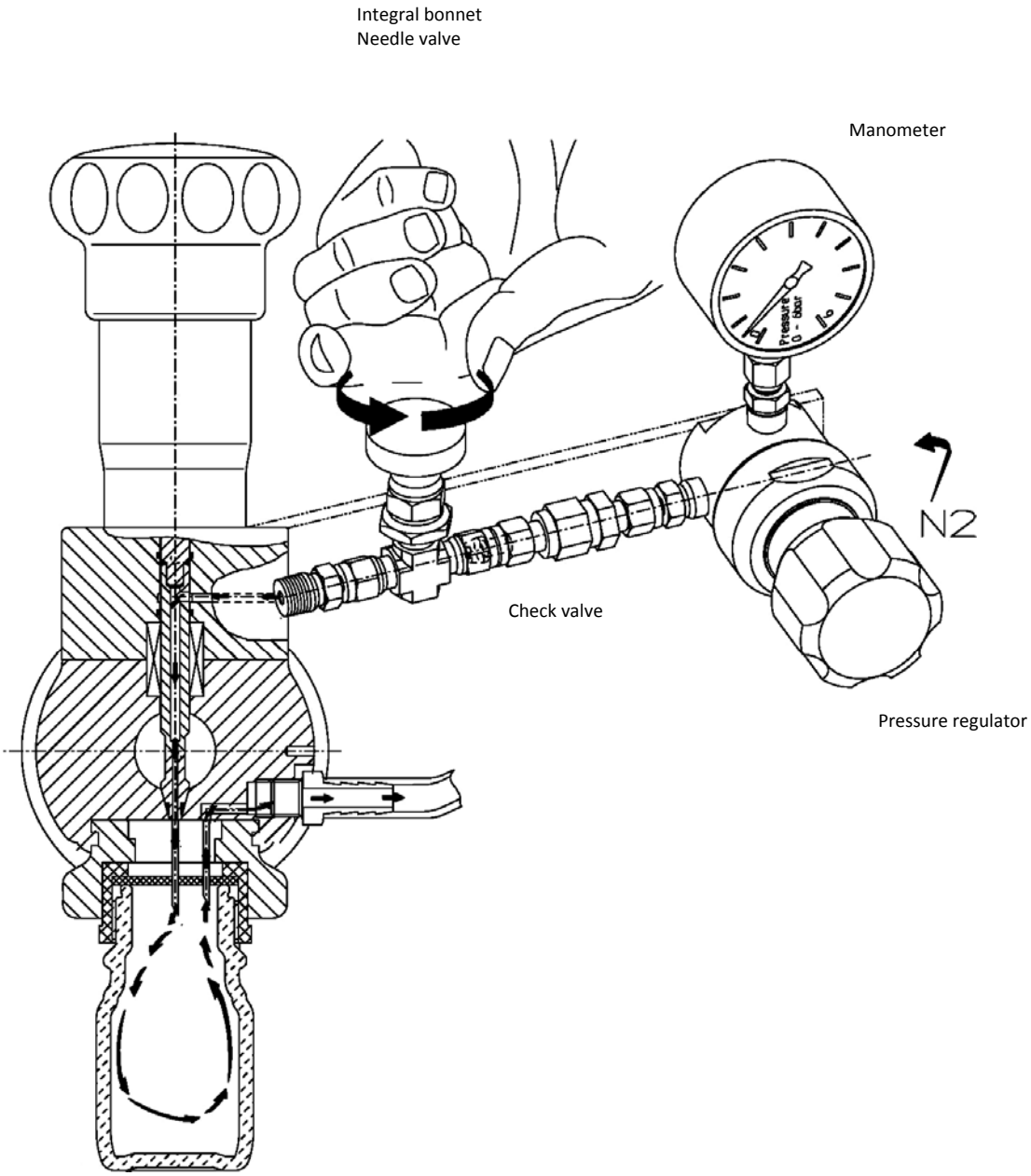

COOLING FINS

Material
316L / 1.4435 / 1.4404

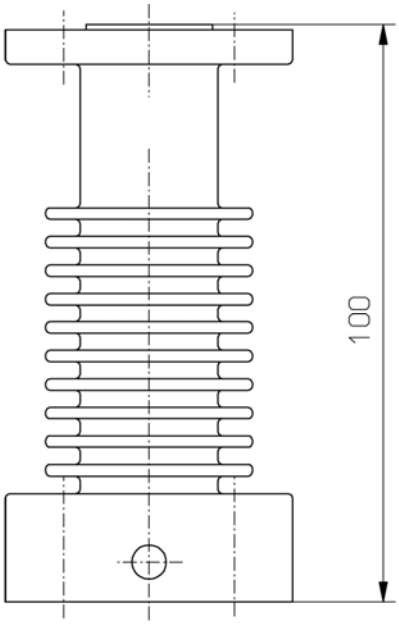

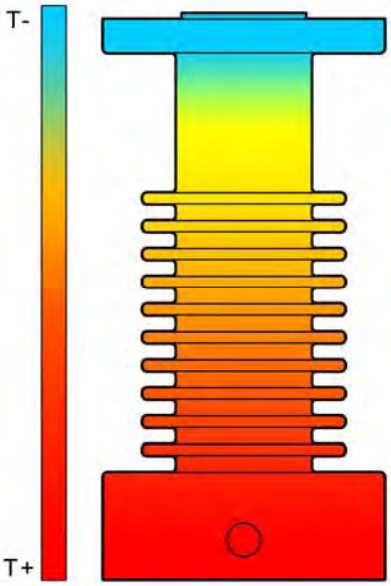

ΔT max : 250°C (482°F)

OPTIONS
DOUBLE EXTENSION

HEATING JACKET
FOR CAST IRON VALVES

ANSI	L	ød
½''	123	95
1''	123	112.9
1½''	161	132
2''	174	157.4
3''	199	195.5
4 ''	225	233.6

Matière
1.4301

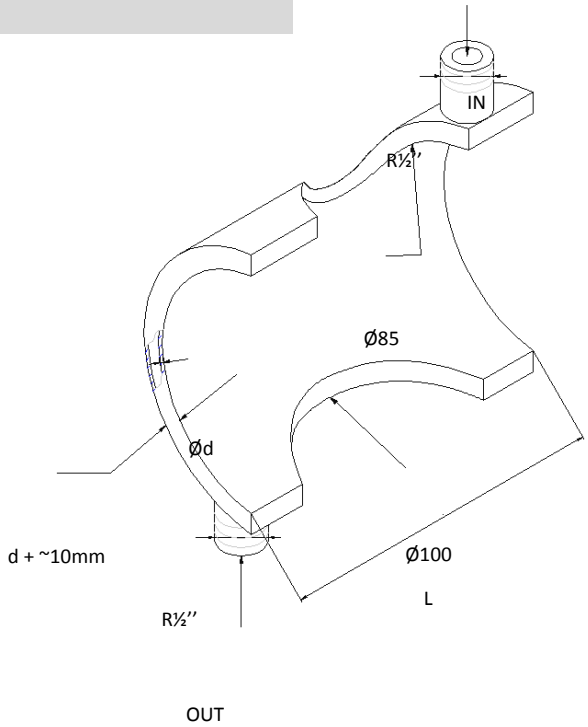

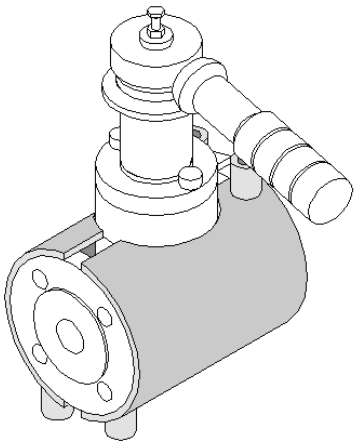

BOTTLE HEAT PROTECTION

Material [1]
PTFE / PP

INFO	
Bottle	p. **5.020**
Plate support	p. **4.050**
Bottle holder	p. **4.030**

[1] *other material on request*

PLEXIGLASS PROTECTION
FOR PLATE SUPPORT SAB

Material
PMMA / 1.4301 / PP

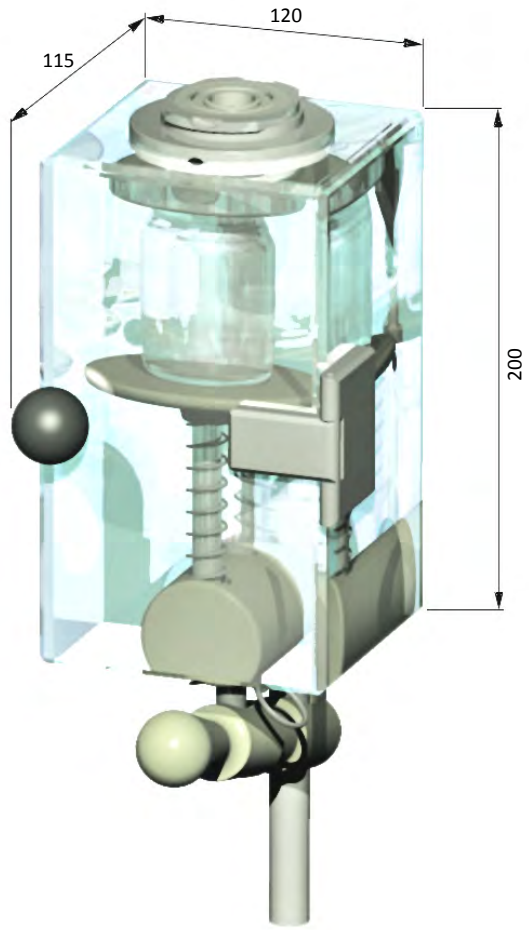

INFO	
Plate support	p. **4.050**
Bottle	p. **5.020**

CONICAL CUP

Material [1]
PFA

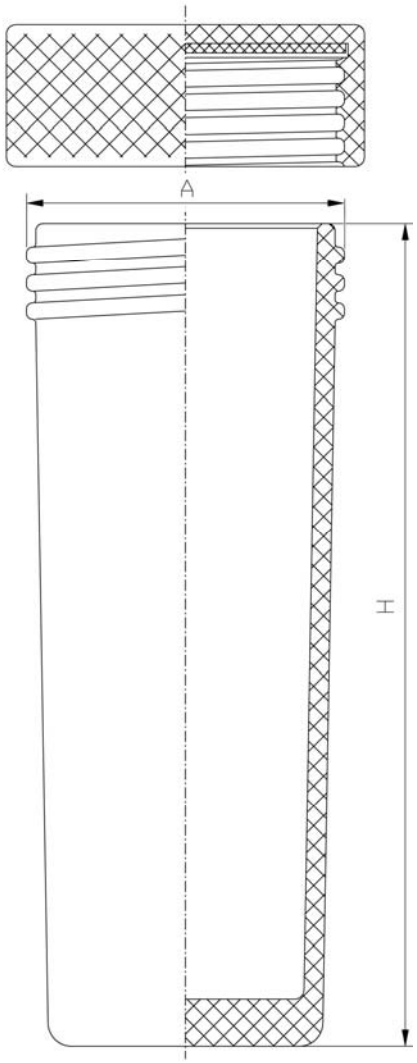

Dimensions		
A	**H** (mm)	**Capacity**
GL45	124	65ml
GL45	175	100ml
DIN68	175	300ml

[1] *other material on request*

OPTIONS

SYSTEMS FOR GASES, LIQUEFIED GASES

Material
316L / 1.4435 / 1.4404 / PTFE / Viton

Other material on request

Design
on demand

OPTION	
Purging system with expansion chamber	
Cooler system	p.6.020
Flowmeter	

COOLER
FOR LIQUIDS AND GAZ

Material [2]
316L / 1.4435 / 1.4404

Shell
450psi@392°F

Coil
4000psi@932°F

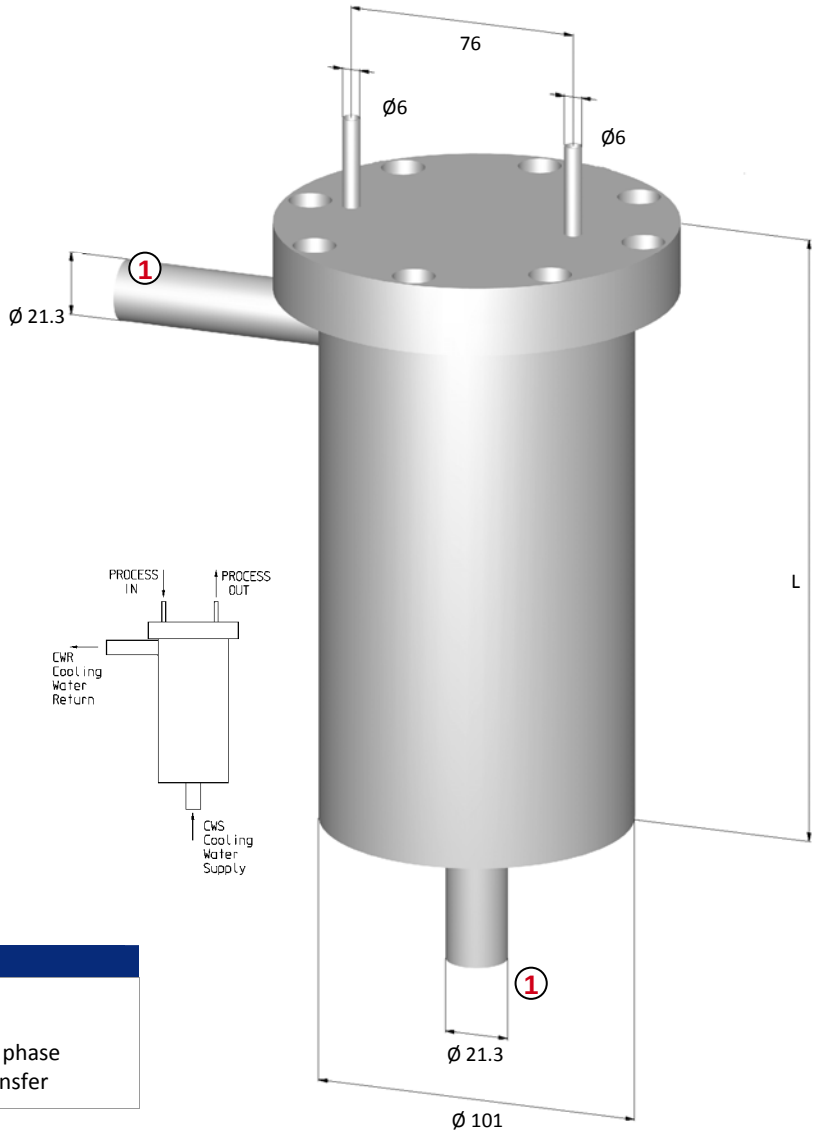

Design
on demand

ADVANTAGES

- Double helix coil for a compact design
- Minimal cooling water requirement
- Best performance below 2000CCM for single phase and below 1000CCM for condensing heat transfer

ACCESSORIES / ZUBEHÖR /ACCESSOIRES

1

...

[2] *other material on request*

REACTOR SAMPLING SYSTEMS

SAMPLING VALVE FOR REACTOR
MULTIFUNCTION

Material
316L / 1.4435 / 1.4404 /
PTFE / BOROSILICATE / PFA
HASTELLOY® C22

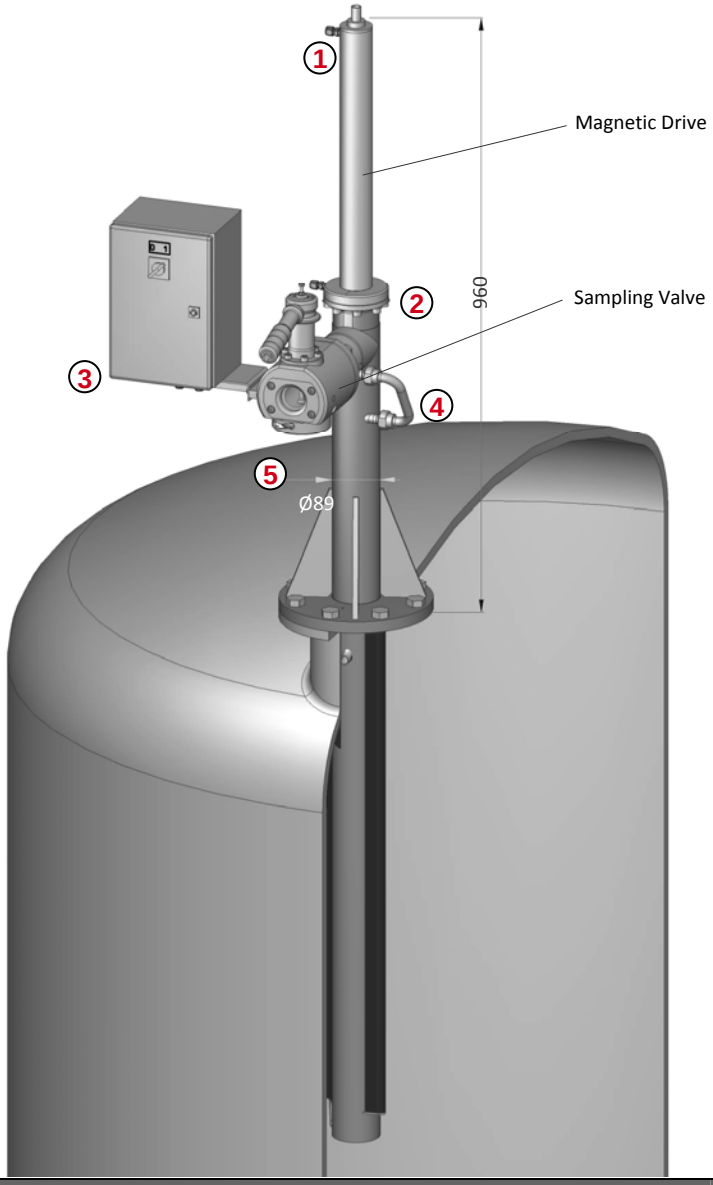

ADVANTAGES
- Simple operation
- Totally closed sampling
- Sampling under vacuum/pressure
- Without pump
- Self-cleaning

CLOSED MAGNETIC DRIVE SYSTEMS	
Actiflow®	Stainless steel
	HASTELLOY® C22
Deepflow®	PFA lined
1	Rinsing connection
2	Heating/Cooling jacket connection
3	Pneumatic control panel
4	OPTION : Measuring cup *(i.e. pH)*
5	Quick connection for accessories
ADVANTAGES	Magnetic drive - no external contact

DYNAMIC SEAL PNEUMATIC DRIVE SYSTEM	
Optiflow®	Stainless steel Other materials on request Less options
1	Rinsing connection
5	Quick connection for accessories
ADVANTAGES	Attractive price

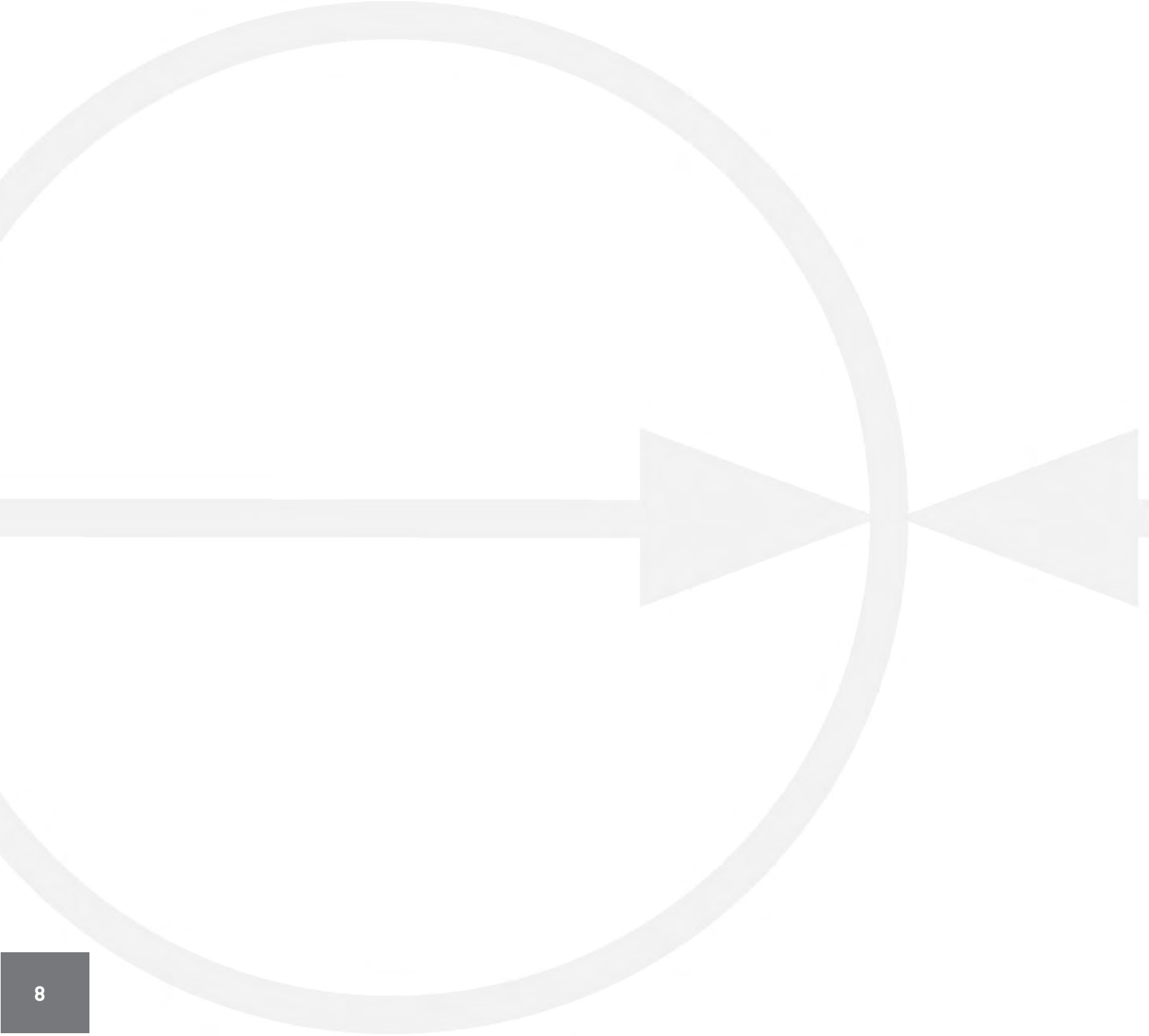

OTHER PRODUCTS (QUANTITATIVE,...)

QUANTITATIVE SAMPLER LOCK CHAMBER

Material
316L / 1.4435 / 1.4404

Other material on request

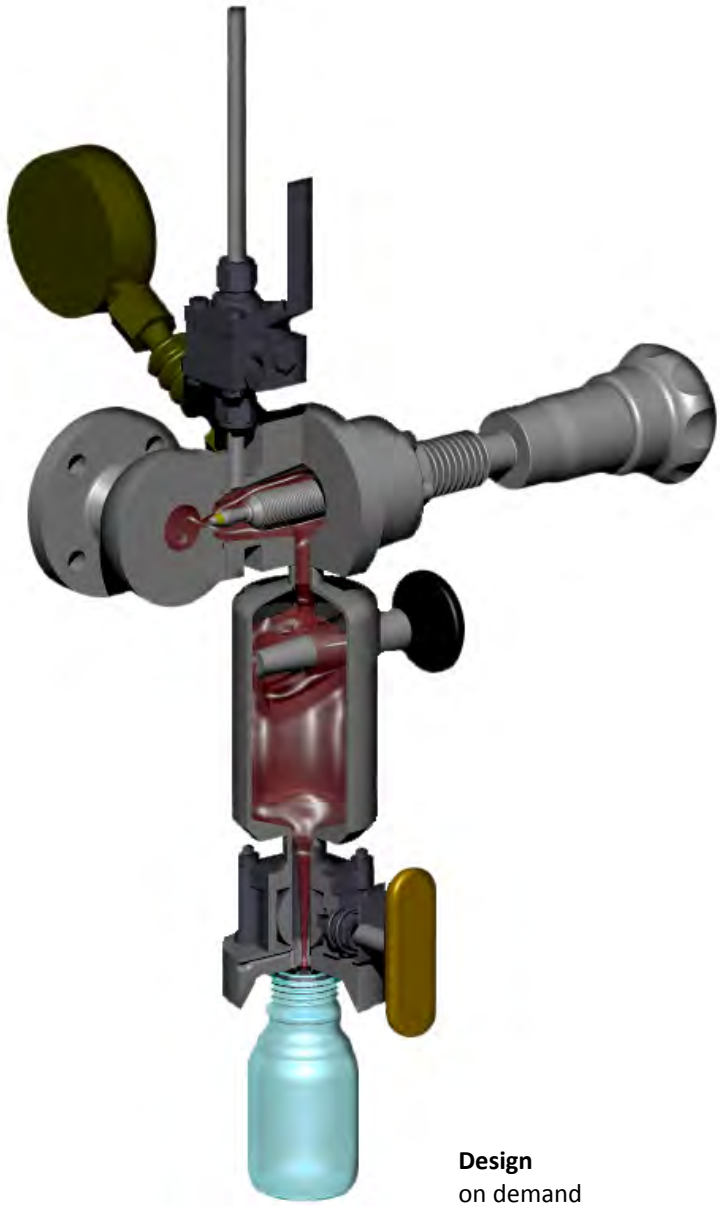

Design
on demand

INFO	
Bottle	**p. 5.020**

SS SAMPLING VALVE

Material [5]
316L / 1.4435 / 1.4404 / PTFE

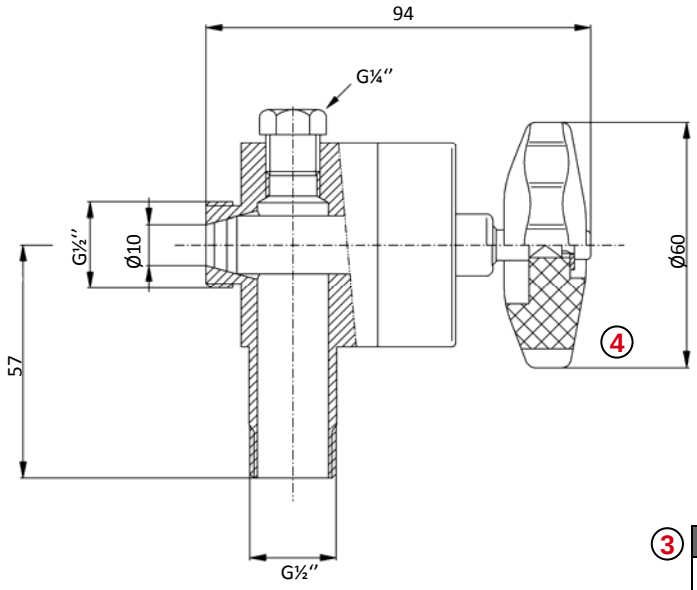

3

ACCESSORIES / ZUBEHÖR

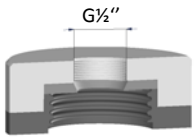

...

INFOS	
1	No dead space
2	Rinsing p. рØлмл
3	Thread adapter GL45
	Quantitative with a ball valve
4	Option : Spring-to-close actuator

	PS -1 → 12 (bars) TS -20 → 200 (°C)

[5] *other material on request*

APPENDIX

PRESSURE DROP
FOR HORIZONTAL VALVE

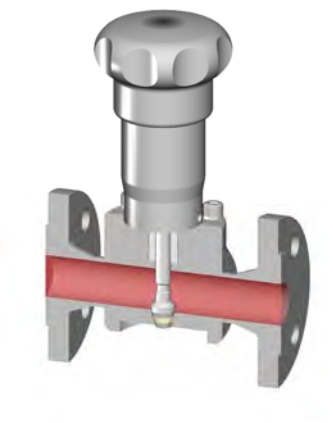

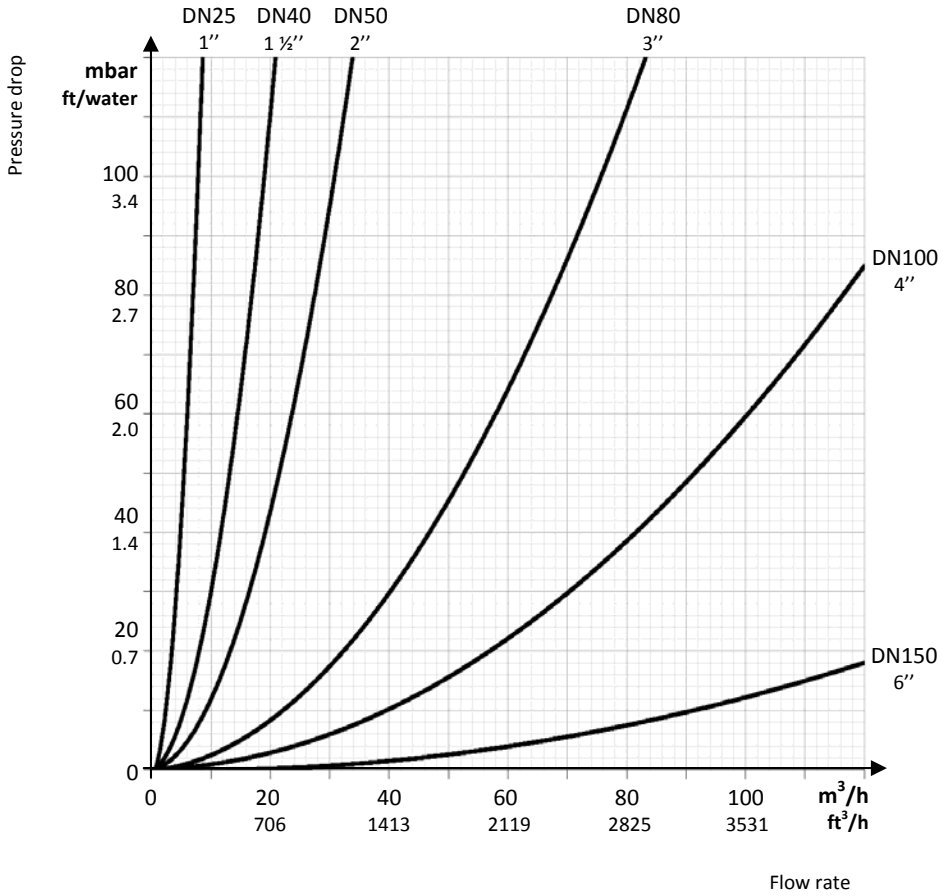

PRESSURE DROP
FOR VERTICAL VALVE

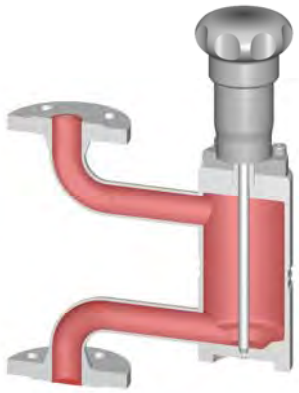

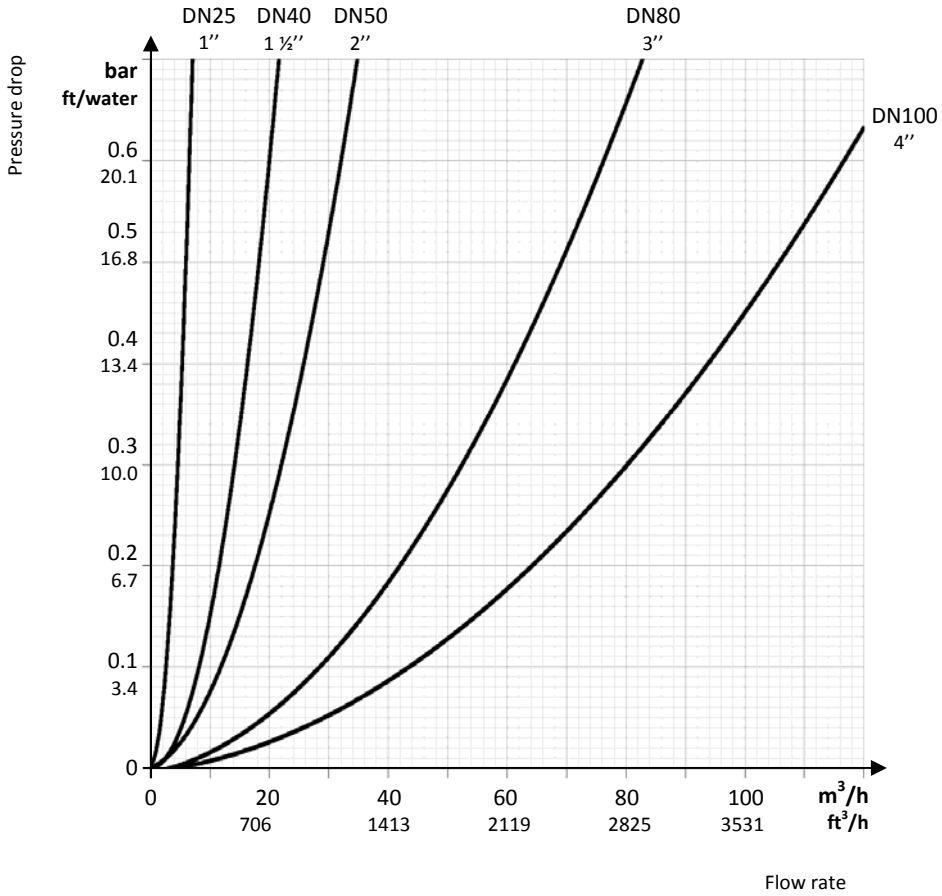

BIAR, Inc.
2506 S. Philippe Ave.
Gonzales, LA 70737

Tel: 225-647-4300
Fax: 225-647-4309
sales@biar.com